Laycock

LAYCOCK-DE NORMANVILLE OVERDRIVE

SECTION 1

WORKING PRINCIPLES AND NOTES ON MAINTENANCE AND FAULT FINDING

LAYCOCK ENGINEERING LIMITED,
Archer Road, Millhouses, SHEFFIELD, S8 OJY.
Telephone: 0742-368221
Telegrams: INVENTION SHEFFIELD
Telex: 54255
A Member of The G.K.N. Group of Companies

LAYCOCK DE NORMANVILLE OVERDRIVE

The overdrive is an additional gear unit between the gearbox and propeller shaft. When in operation it provides a higher overall gear ratio than that given by the final drive crown wheel and pinion.

The primary object of an overdrive is to provide open road cruising at an engine speed lower than it would be in normal top gear. This reduced engine speed gives a considerable reduction in petrol consumption and increase in engine life. Overdrive may also be used on the indirect gears to enhance performance or to provide easy and clutchless gear changing for example in town traffic.

Two basic sizes of unit are produced, known as 'A' and 'D' illustrated in Figs. 1 and 2 respectively. The former is the larger unit and is used on cars having engine capacities of about 2 litres and upwards and the 'D' type on smaller cars.

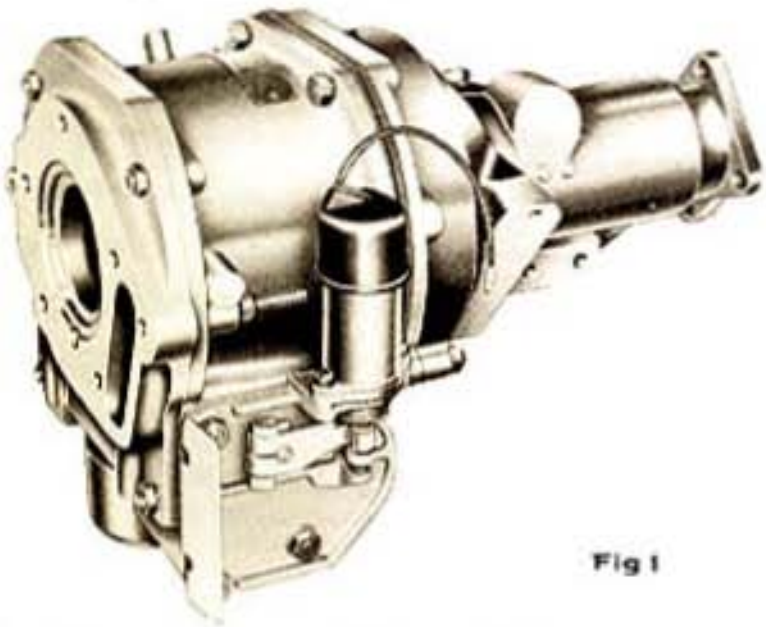

Fig 1

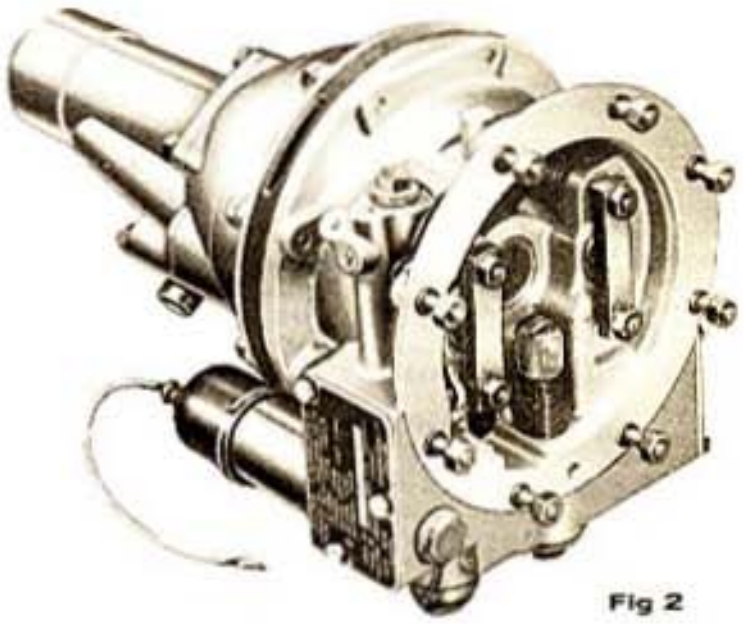

Fig 2

The 'A' type is available with gear ratios of either 0·778 or 0·820 to 1 and the 'D' type with ratios of either 0·756 or 0·802 to 1.

The overdrive is operated by an electric solenoid controlled by a switch, usually mounted on the steering column or fascia panel. An inhibitor switch is invariably fitted in the electrical circuit to prevent engagement of overdrive in reverse and some or all of the indirect gears.

Overdrive can be engaged or disengaged at will at any speed but usually above, say 30 m.p.h. in top gear. It should be operated without using the clutch pedal and at any throttle opening because the unit is designed to be engaged and disengaged when transmitting full power. The only precaution necessary is to avoid disengaging overdrive at too high a road speed, particularly when using it in an indirect gear, since this would cause excessive engine revolutions.

WORKING PRINCIPLES ('A' and 'D' TYPES)

The overdrive gears are epicyclic and consist of a central sunwheel meshing with three planet gears which in turn mesh with an internally toothed annulus. The planet carrier is attached to the input shaft and the annulus is integral with the output shaft.

The unit is shown diagrammatically in Fig. 3.

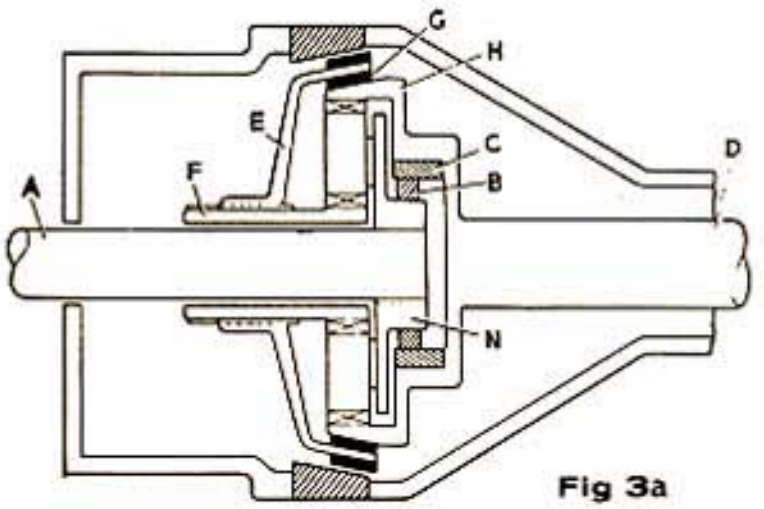

Fig 3a

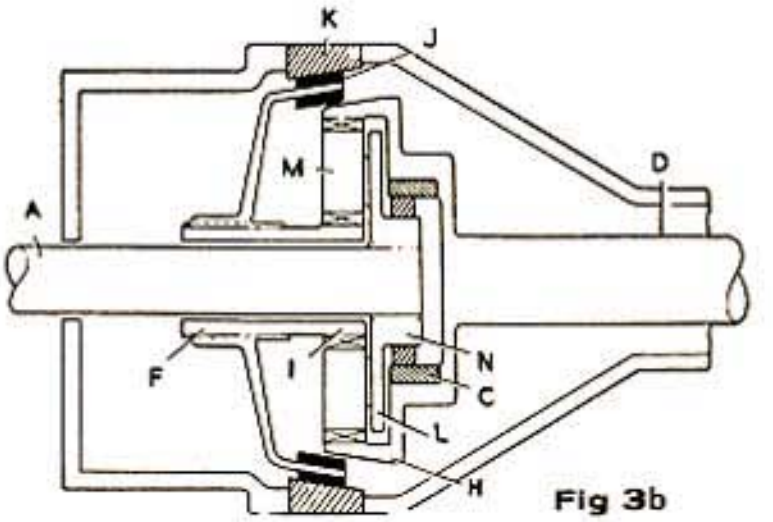

Fig 3b

An extension of the gearbox mainshaft forms the overdrive input shaft. In direct drive (Fig. 3a) power is transmitted from this shaft A to the inner member of a uni-directional clutch N and then to the outer member C of this clutch through rollers B which are driven up inclined faces and wedge between the inner and outer members. The outer member C forms part of the combined annulus H and output shaft D. The gear train is inoperative. A cone clutch E is mounted on the externally splined extension F of the sunwheel and is loaded on to the annulus by a number of springs which have their reaction against the casing of the overdrive unit. The spring load is transmitted to the clutch member through a thrust ring and ball bearing. This arrangement causes the inner friction lining G of the cone clutch to contact the outer cone of the annulus H and rotate with the annulus, whilst the springs and thrust ring remain stationary. Since the sunwheel is splined to the clutch member the whole gear train is locked, permitting over-run and reverse torque to be transmitted. In 'D' type units additional load is imparted to the clutch member, during over-run and reverse, by the sunwheel which, due to the helix angle of its gear teeth, thrusts rearward and has for its reaction member the cone clutch.

Fig. 3b shows the position of the cone clutch when overdrive is engaged. It will be seen that it is no longer in contact with the annulus, but has moved forward so that its outer friction lining J is in contact with a brake ring K forming part of the overdrive casing. The sunwheel I to which the clutch is attached, is therefore held stationary. The planet carrier L rotates with the input shaft A and the planet wheels M are caused to rotate about their own axes and drive the annulus at a faster speed than the input shaft. The uni-directional clutch allows this since the outer member C can over-run the inner member.

Movement of the cone clutch in a forward direction is effected by means of hydraulic pressure which acts upon two pistons when a valve is opened by operating the driver-controlled selector switch. This hydraulic pressure overcomes the springs which load the clutch member on to the annulus and causes the clutch to engage the brake ring with sufficient load to hold the sunwheel at rest.

Hydraulic pressure is developed in the system by a plunger pump, cam operated, from the input shaft. The pump draws oil through a wire mesh filter, in which is incorporated a magnet, and delivers it to the operating valve of the unit. 'A' type units incorporate a hydraulic accumulator in the circuit but in the 'D' type units the working pressure is controlled by a relief valve.

Pressure varies according to the installation but in 'A' type units is usually between 360-520 lbs/sq.ins. and in 'D' type units between 470-520 lbs/sq.ins. Appendix A gives the correct hydraulic pressure for various production units.

OPERATION OF OPERATING VALVE 'A' AND 'D' TYPES

Fig. 4a shows the position of the operating valve in direct drive. In this position the ball C is on the seat in the casing and isolating the supply D from the operating cylinders E. Fig. 4b shows the position of the operating valve in the overdrive position: here the valve has been lifted, by action of the solenoid causing the cam A to rotate, lifting the ball off the seat in the casing and sealing off the top of the valve. This allows oil under pressure to transfer from port D to the operating cylinders E. On returning to direct drive, Fig. 4a the oil from the operating cylinders is exhausted down the hollow stem of the valve and through the restrictor G. On some 'D' type units there is no pressure in direct drive since a port D below the ball seating allows the oil to exhaust to the sump via the hollow operating valve. In overdrive this is sealed off by the ball valve and hence the pressure builds up.

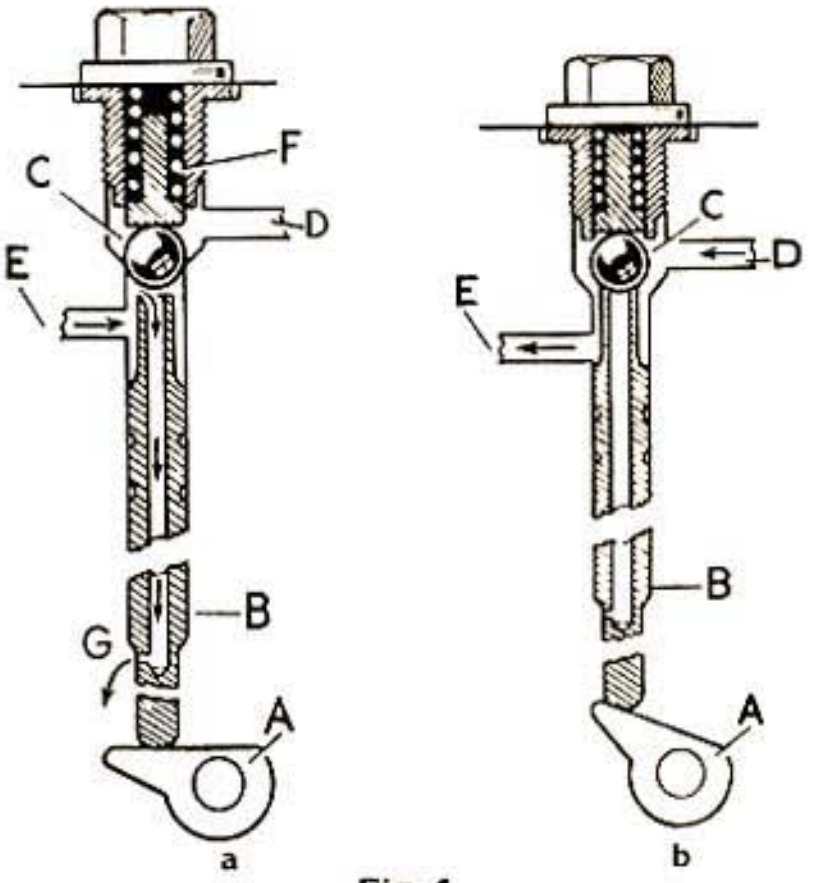

Fig 4

LUBRICATION

The gearbox and overdrive unit, being adjacent, usually have a common oil supply and the oil level is indicated by a level plug or dipstick in the gearbox. In certain applications the overdrive unit may have an independent supply, in which case a separate filler plug is provided. Separate drain plugs are provided for the gearbox and overdrive unit and both must be removed when draining the oil even though the two systems may be connected. The gauze filter in the overdrive unit should be removed and cleaned whenever the oil is changed. In 'A' type units the filter is accessible when the drain plug is removed. On 'D' type units remove the rectangular plate Ref. A on Fig. 6 which is secured by four setscrews.

Later 'D' type units have lubrication via a drilling in the mainshaft; the spill oil from the relief valve is diverted through drilled passages to a bush in the front casing, and from this into the shaft and along the centre drilling to the rear bearing in the annulus. From here the oil passes due to centrifugal force through the uni-directional clutch to an oil thrower from which it is picked up by a catcher on the planet carrier and to the planet bearings via the hollow planet bearing pins.

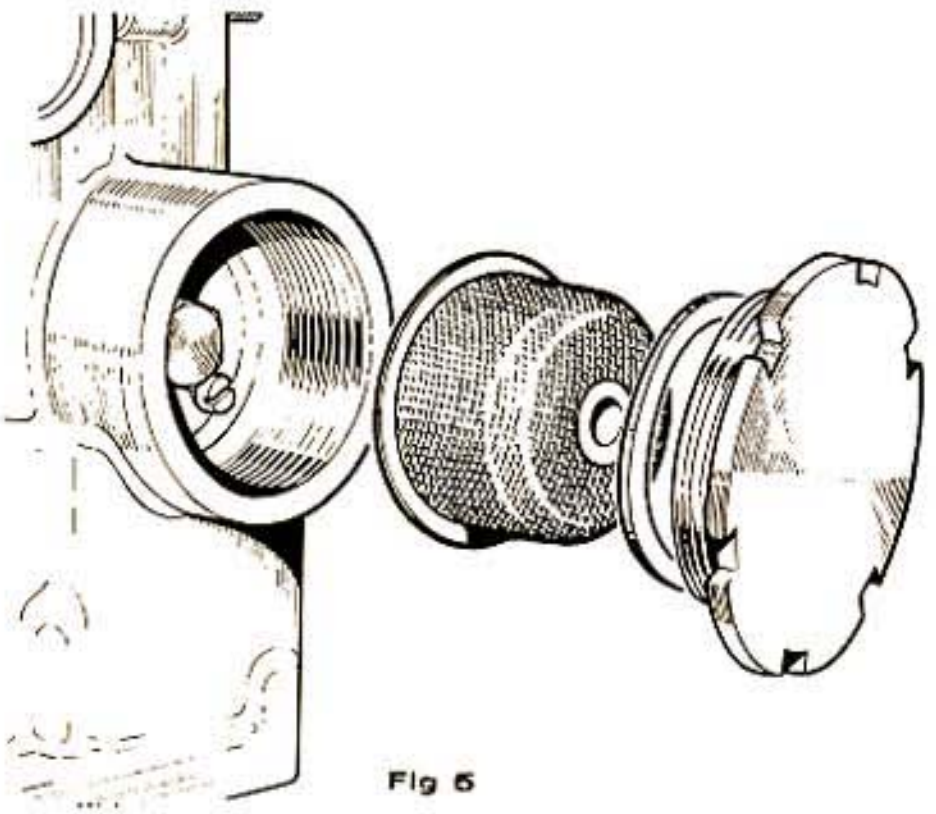
Fig 5

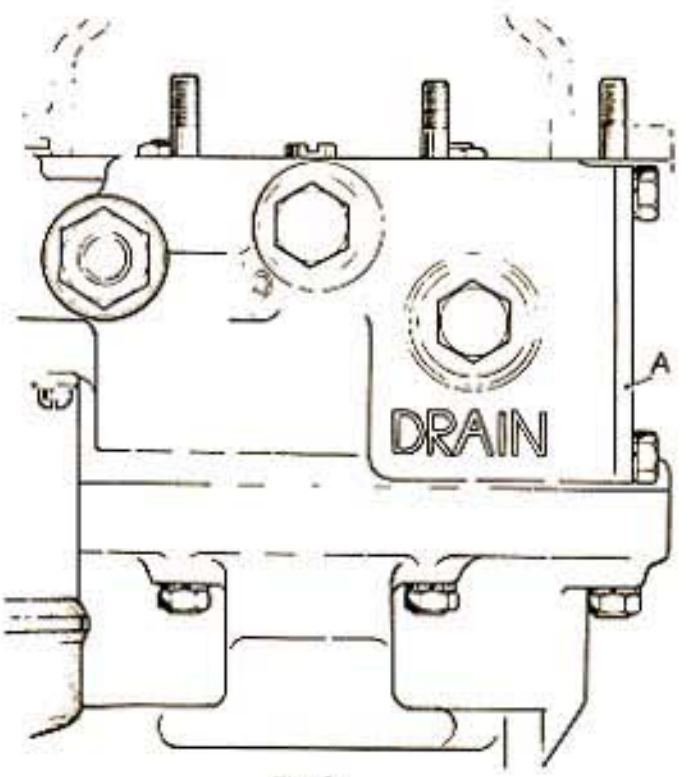

Fig 6

It is essential that an approved lubricant be used when refilling, preferably a straight mineral oil with a viscosity between SAE.30 and SAE.50 with no E.P. additives.

ON NO ACCOUNT SHOULD ANY ANTI-FRICTION ADDITIVES BE PUT INTO THE OIL.

After refilling the gearbox and overdrive, re-check the oil level after the car has been run for a short distance as a certain amount of oil will be distributed round the hydraulic system. It is most important to use clean oil at all times and great care must be taken to avoid the entry of dirt whenever any part of the casing is opened. Dirt, or even lint from a wiping cloth, which finds its way into a valve, will cause trouble. If the hydraulic valves are dismantled, care should be taken to prevent scratches or nicks since these might cause leakage.

FAULT FINDING 'A' and 'D' TYPES

Overdrive does not engage

1. Insufficient oil in gearbox.
2. Electrical system not working. See page 7 - The Electrical Circuit.
3. Solenoid operating lever out of adjustment.
4. Insufficient hydraulic pressure due to pump non-return valve incorrectly seating (Probably dirt on seat).
5. Insufficient hydraulic pressure due to worn accumulator on 'A' types, sticking or worn relief valves 'D' types.
6. Pump not working due to choked filter.
7. Pump not working due to damaged pump roller or cam.
8. Leaking operating valve due to dirt on ball seat.
9. Damaged parts within the unit requiring removal and inspection.

Overdrive does not disengage

NOTE IF OVERDRIVE DOES NOT DISENGAGE DO NOT REVERSE THE CAR OTHERWISE EXTENSIVE DAMAGE MAY RESULT.

1. Fault in electrical control system.
2. Solenoid sticking.
3. Blocked restrictor jet in operating valve.
4. Solenoid operating lever incorrectly adjusted. See page 5 - Adjustment of Solenoid Operating Levers.
5. Sticking clutch. See page 7 - Sticking Clutch.
6. Damaged gears, bearings, or sliding parts within the unit.

Clutch slip in overdrive

1. Insufficient oil in gearbox.
2. Solenoid lever out of adjustment.
3. Insufficient hydraulic pressure due to pump non-return valve incorrectly seating. (Probably dirt on seat).
4. Insufficient hydraulic pressure due to worn accumulator on 'A' types, sticking or worn relief valve 'D' types.
5. Operating valve incorrectly seated.
6. Worn or glazed clutch lining.

Clutch slip in reverse or free wheel condition on overdrive

1. Solenoid operating lever out of adjustment.
2. Partially blocked restrictor jet in operating valve.
3. Worn or burnt inner clutch lining.

NOTE Before removing any of the valve plugs it is essential to operate the solenoid several times in order to release all hydraulic pressure from the system. To do this, engage top gear, switch on the ignition and operate the overdrive control switch several times.

THE OPERATING VALVE ('A' and 'D' TYPES)

The valve plug is located on top of the unit and access to it is through the floor of the car, a cover plate usually being provided for this purpose. Operate the solenoid several times to release hydraulic pressure from the system. Unscrew the valve plug with a 7/16" A/F spanner. If very tight, a sharp tap on top will help. Remove the spring, plunger and ball. A small magnet will be found useful for this operation. The operating valve can be removed by inserting a piece of stiff wire down its centre and drawing it up, but care must be taken to avoid damaging the seating at the top of the valve. Near the bottom of the valve will be seen a small hole, breaking through to the centre drilling. Fig. 4a - G. This is for the exhaust of oil from the operating cylinders. Ensure that this is not choked.

If necessary the ball can be re-seated on top of the operating valve by placing the ball on a block of wood and sharply tapping the valve after positioning it on the ball. Clean the valve seat in the casing and if necessary re-seat the ball by tapping it gently on its seat with a copper drift. Do not tap the ball too hard or the mouth of the hole will be closed up so that the valve cannot be re-assembled.

ADJUSTMENT OF SOLENOID OPERATING LEVERS

The operating valve referred to above is lifted by a cam on a transverse shaft. The solenoid operates a lever attached to this shaft. When the solenoid operates the valve must be fully opened.

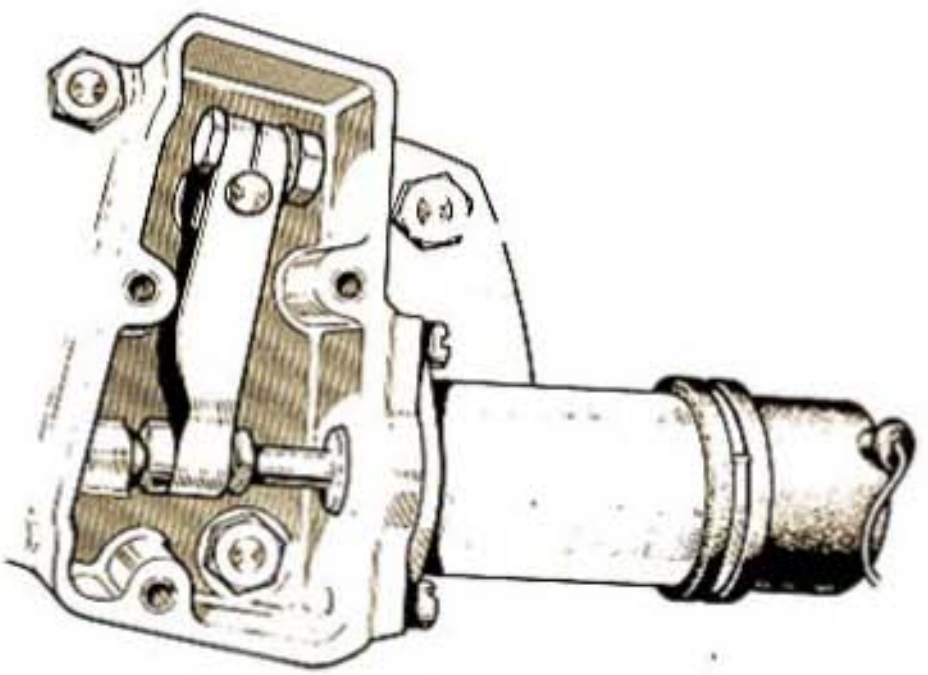

Fig 7

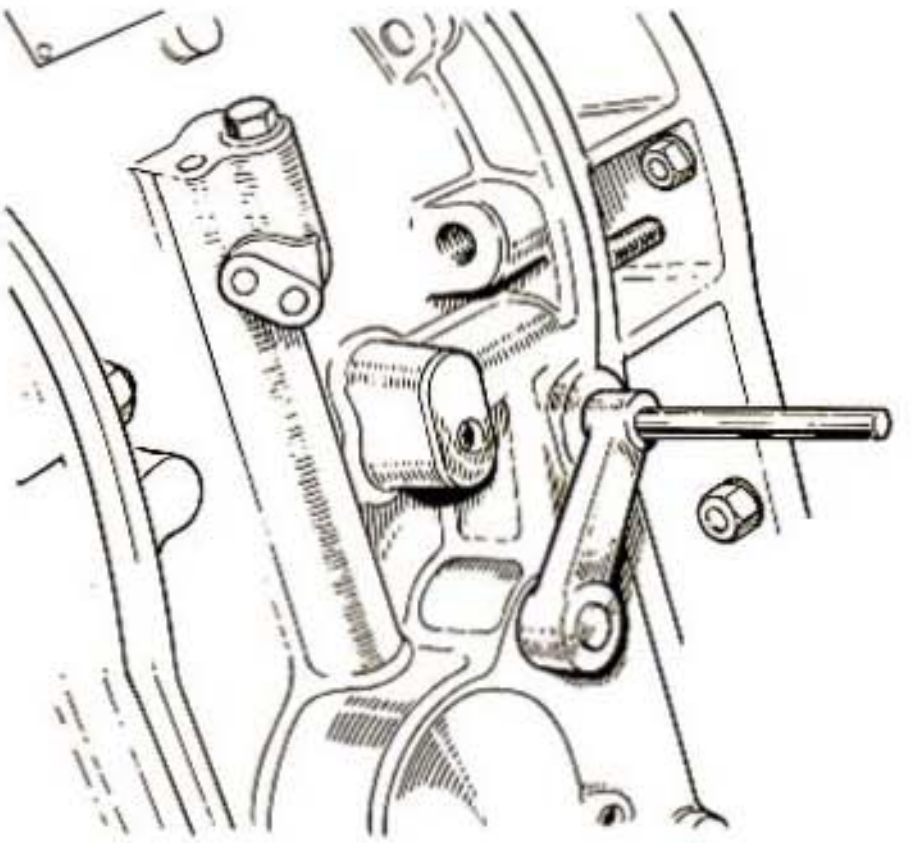

Fig 8

ADJUSTMENT FOR 'A' TYPE UNITS

In this unit the transverse shaft passes right through the casing; where it protrudes there is a setting lever attached. This has a 3/16" hole in its outer end, (Fig. 8). This hole should align with a similar hole in the overdrive casing when the solenoid is energised. For the purpose of checking the setting of the solenoid lever a 3/16" diameter pin, such as a drill shank, should be inserted through the hole in the lever and should register in the hole in the casing when the solenoid is energised. If the pin will not register in the casing the solenoid lever requires adjustment — proceed as follows. Remove the cover plate from the solenoid housing (not fitted on some models). Loosen the clamp bolt on the lever, then rotate the shaft until the pin inserted in the lever, registers in the hole in the casing. Push the solenoid plunger as far home as it will go, and hold the lever fork lightly against the collar on the plunger. Tighten the clamp bolt; remove the pin from the setting lever, then re-check by energising the solenoid and checking the alignment of the holes.

ADJUSTMENT FOR 'D' TYPE UNITS

First remove the rectangular solenoid cover plate which is secured by three screws. Now the solenoid lever can be observed. This also has a 3/16" hole for setting purposes. The procedure is similar to the 'A' type but there is no clamp bolt on the lever. Move the lever until the 3/16" pin pushed through the hole in the lever registers in the hole in the casing, then screw the nut on the plunger until, when the plunger is pushed right home the nut just contacts the forks of the lever. Remove the 3/16" pin. Re-check by energising the solenoid and checking the alignment of the holes. When the solenoid is energised the current consumption should be about 1 ampere. If it is 15-20 amperes it is an indication that the solenoid plunger is not moving far enough to switch from the operating to the holding coil of the solenoid and the lever must be adjusted.

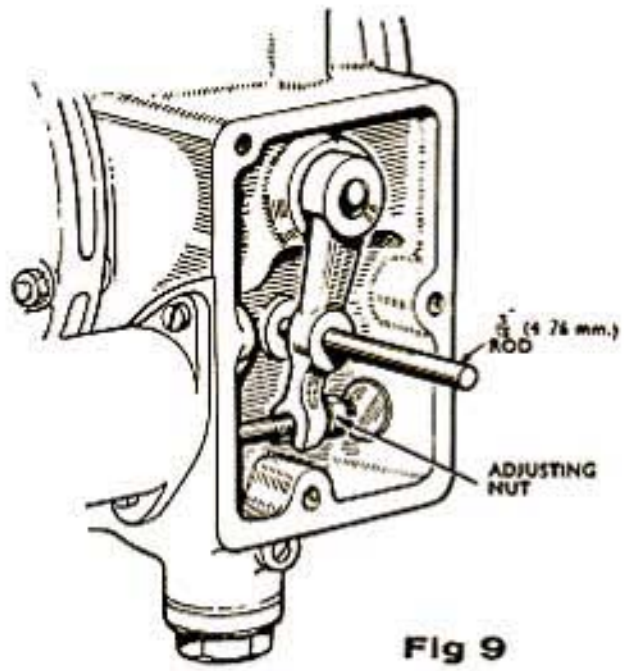

Fig 9

THIS IS IMPORTANT AS HIGH CURRENT WILL CAUSE SOLENOID FAILURE.

TESTING OIL PRESSURE

Release the hydraulic pressure by switching on the ignition, engaging top gear and operating the overdrive switch several times. Remove the operating valve plug and replace it with the hydraulic test equipment (Churchill tool L.188) which has a pressure gauge reading to 800 p.s.i.

Jack up the rear wheels of the car securely, start the engine, engage top gear and run up to about 20 m.p.h. on the speedometer. Hydraulic pressure should then be recorded. Check the pressure in direct and overdrive. See Appendix A.

NOTE On some 'D' type units there is no hydraulic pressure in direct drive but pressure will be recorded when the overdrive is engaged.

Failure to register pressure with overdrive selected may indicate that the pump non-return valve requires cleaning and re-seating.

On those units which normally have pressure in direct drive as well as overdrive, variation in pressure between the two conditions may indicate that the operating valve requires cleaning and re-seating.

THE PUMP VALVE

If the unit fails to operate after re-seating the operating valve, check that the pump is working. Jack up the rear wheels of the car securely, remove the operating valve plug referred to above and start the engine. Engage top gear and with the engine running slowly, watch for oil being pumped into the valve chamber. If none appears the pump is not functioning and its non-return valve should be cleaned. A flow of oil does not necessarily mean that the hydraulic pressure is correct.

Access to the non-return valve in 'A' type units requires removal of the accumulator end cover. On most units this is also the solenoid bracket. Proceed as follows : Drain off the oil; remove the cover from the solenoid bracket and remove the solenoid. Slacken off the clamp bolt in the solenoid lever and remove the lever and solenoid plunger. Remove the distance collar under the lever. The solenoid bracket is secured by two 5/16" studs and two bolts. Remove the nuts from the studs before unscrewing the bolts; this is important. Now unscrew the bolts together, releasing the compression on the accumulator spring. Remove the spring and guide tube. The pump valve plug will then be seen inside the cavity. The valve consists of a spring, plunger and ball similar to those used for the operating valve, except that the steel ball is ¼" diameter. Carefully clean the ball and the valve seating; if necessary re-seat the ball by tapping it sharply on to its seating. When re-assembling, the solenoid lever must be correctly set as already described. See page 6 - Adjustment for 'A' Type Units.

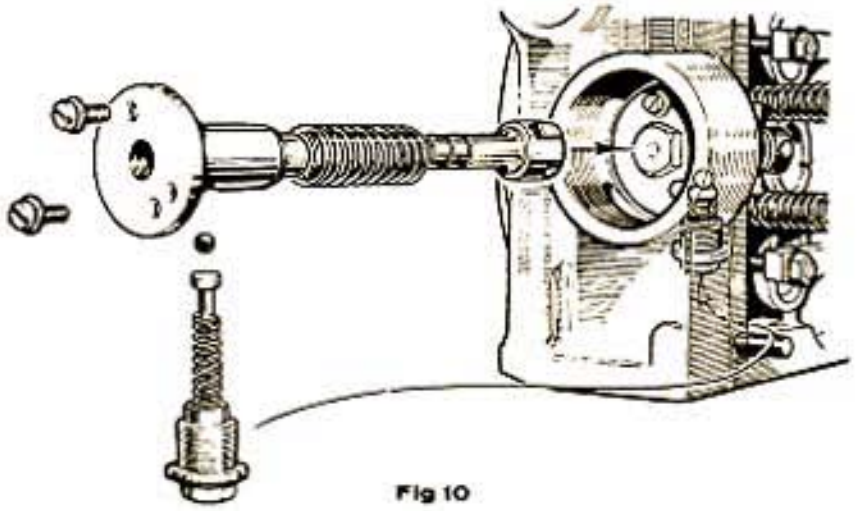

Fig 10

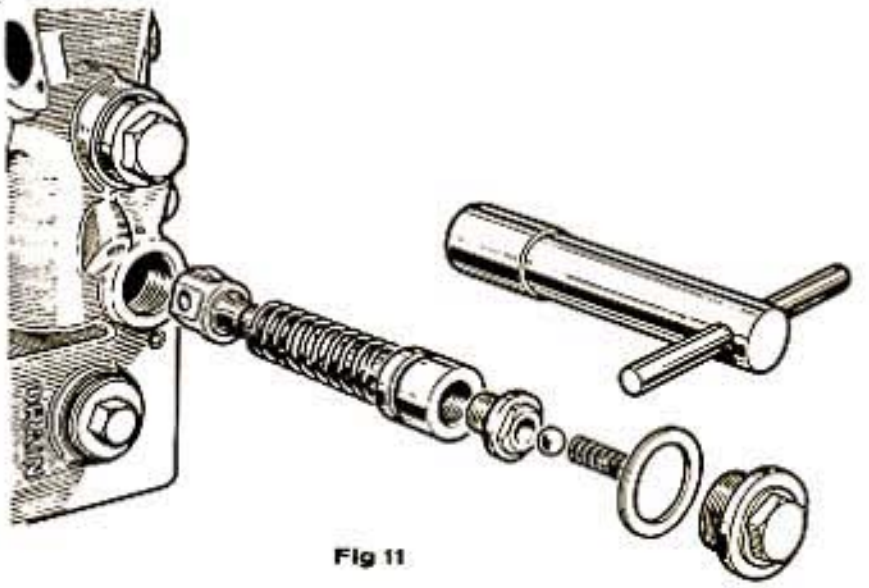

Fig 11

The pump valve of 'D' type units is accessible from underneath the unit when the centre plug is removed, Fig. 6. Unscrew the valve body, carefully clean the ball and the valve seating and re-seat the ball by tapping it sharply on to its seating.

STICKING CLUTCH

If overdrive cannot be disengaged after carrying out the procedure outlined on page 4, the trouble is probably caused by a sticking cone clutch. This trouble might be experienced on a new unit due to insufficient "bedding in" of the clutch, but is unlikely to occur on a unit which has been in service for some time.

The clutch can usually be freed by giving the brake ring several sharp blows with a hide mallet. On most cars this can be done from underneath when the car is on a hoist. On some cars, where the gearbox cover is removable, it can be done from above.

THE ELECTRICAL CIRCUIT

Before embarking on the full procedure for fault location, it will be found helpful to keep the following points in mind.

Many operational failures are due to corroded terminals and faulty wiring, so make a point of checking over the wiring and connections first.

Good earth connections are essential on all earthed components. This applies particularly to the solenoid because of the heavy current passed momentarily each time the overdrive is engaged.

Incorrect adjustment of the solenoid, resulting in failure of the main winding contacts to open, may cause damage to the solenoid and to the relay.

The method of controlling the overdrive unit differs according to the requirements of the car manufacturer, but the basic system is illustrated in Fig. 12. If overdrive fails to operate and the wiring has been checked, proceed as follows :-

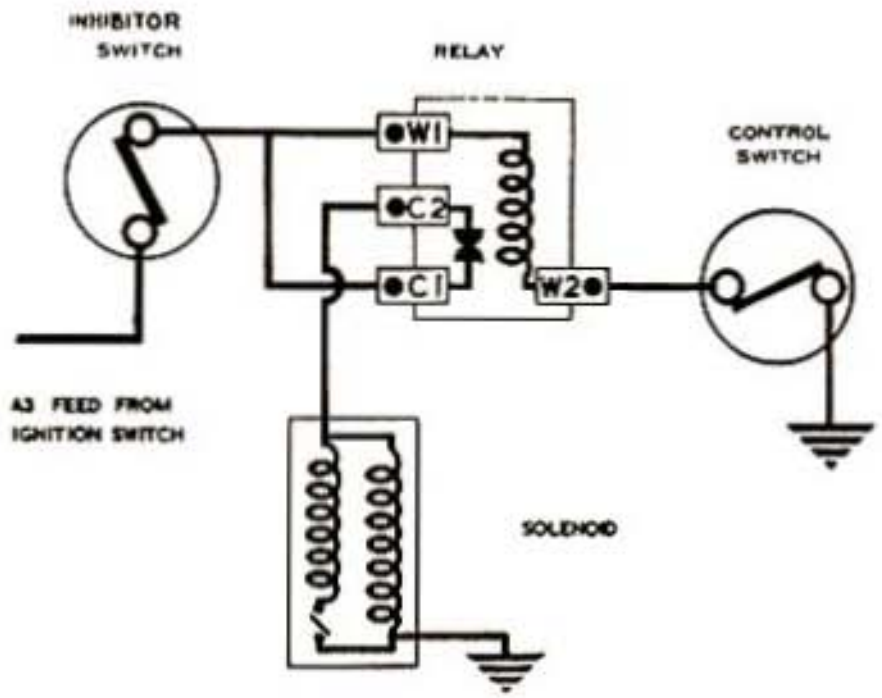

Fig 12

1. Short out terminals of C1 and C2 of the relay, switch on ignition and engage top gear. If the solenoid fails to operate suspect faulty inhibitor switch. If the solenoid operates the inhibitor switch and solenoid are in order. Proceed to Test 4.
2. Connect terminal C1 to A3. If solenoid operates the inhibitor switch is faulty. If it does not operate suspect faulty solenoid.
3. Connect solenoid terminal to A3. If solenoid fails to operate or is sluggish, it is faulty.
4. Connect W1 of relay to A3 with the control switch closed. If solenoid operates, relay and control switch are satisfactory. If solenoid does not operate proceed to Test 5.
5. Link W2 of relay to earth. If solenoid fails to operate the relay is faulty. If solenoid operates, control switch may be faulty. Proceed to Test 6.
6. Connect feed terminal of control switch to earth with switch closed. If solenoid operates, control switch is faulty.

APPENDIX 'A'

HYDRAULIC PRESSURES

'A' TYPE UNITS

Serial No.	Model	Hydraulic Pressure P.S.I.
28/1547	A.C.	470 - 490
28/3067	Alvis TD.21	500 - 520
22/3307	Aston Martin DB.4	470 - 490
28/3049	Aston Martin DB.4	540 - 560
28/1464	Aston Martin DB.2/4	420 - 440
28/1360	Armstrong Siddeley	510 - 530
22/3087	Austin Healey 3000	470 - 490
28/1292	Austin Healey	420 - 440
28/1447	Austin Healey 100 - 6	470 - 490
22/3009	Austin Healey 3000	470 - 490
28/1434	Bristol	470 - 510
28/1305	Bristol 405 C	470 - 510
28/3015	Bristol 405 C	470 - 510
28/3027	Ferrari 250 GT	490 - 510
22/3059	Ferrari 250 GT	490 - 510
28/3072	Ferrari 400 SA	530 - 540
22/3039	Ferrari 400 SA	530 - 540
28/3062	Ferrari 400 SA	530 - 540
28/3079	Ford Consul & Zephyr - Phase II	510 - 530
28/1286	Ford Consul & Zephyr - Phase I	540 - 560
28/3309	Ford Consul	330 - 350
28/3094	Ford - Phase II	510 - 530
28/3023	Ford - Phase II	510 - 530
28/3057	Humber Hawk	380 - 400
28/3323	Humber Hawk	440 - 460
28/1302	Humber Hawk	350 - 370
28/1463	Humber Hawk	380 - 400
28/3058	Humber Super Snipe	570 - 590
28/3088	Humber Super Snipe	440 - 460
28/3322	Humber Super Snipe	525 - 575
28/1289	Humber Super Snipe	470 - 490
28/3007	Humber Super Snipe	570 - 590
28/1369	Jaguar 2.4 litre Mk II	350 - 370
28/1474	Jaguar 3.4 litre Mk II	420 - 440
28/3028	Jaguar 3.8 litre Mk II	540 - 560
28/1482	Jaguar XK 140	480 - 500
28/3034	Jaguar XK 150	540 - 560
28/1516	Jaguar XK 150	480 - 500
28/3020	Jaguar XK 150	480 - 500
28/1270	Jaguar Mk VII & VIII	480 - 500
28/3018	Jaguar Mk IX	540 - 560

Serial No.	Model	Hydraulic Pressure P.S.I.
28/3005	Jensen 541 R	510 - 530
28/1337	Jensen 541	480 - 500
28/3014	Jensen 541 R	480 - 500
28/1502	Rover 60, 75, 90	350 - 370
28/1487	Rover 75, 90	350 - 370
28/3068	Rover 80 and 100	350 - 370
28/2002	Rover P.5	420 - 440
28/3078	Rover 3 litre	420 - 440
28/1506	Rover T.C.	420 - 440
28/1327	Standard Vanguard	490 - 510
28/1427	Standard Vanguard	490 - 510
28/1553	Standard Vanguard (3 speed gearbox)	350 - 370
22/3092	Standard Vanguard (4 speed gearbox)	370 - 390
22/2001	Standard Ensign	380 - 400
28/1296	Sunbeam Alpine	350 - 370
28/1307	Sunbeam Talbot MK III	350 - 370
22/1374	Triumph TR2, TR3, TR4	380 - 400
28/3045	Vauxhall Velox and Cresta PA	510 - 530
28/3073	Vauxhall PA	510 - 530
28/1257	Vauxhall Velox	490 - 510
28/1300	Vauxhall Wyvern	490 - 510
28/3313	Vauxhall Velox and Cresta PB	510 - 530
28/3331	Vauxhall Velox and Cresta PB	510 - 530
'D' TYPE UNITS		
32/3055	Fiat 2300	520 - 540
32/3303	Fiat 1800	480 - 500
32/1594	Ford 100E	470 - 490
32/1525	M.G. Magnette	470 - 490
25/3308	M.G.B.	540 - 560
32/1450	Sunbeam Rapier I	470 - 490
32/1509	Sunbeam Rapier I	470 - 490
25/3082	Sunbeam Alpine II Singer Vogue	470 - 490
25/3010	Sunbeam Alpine I	470 - 490
25/3036	Sunbeam Alpine I	470 - 490
25/3046	Sunbeam Alpine I	470 - 490
25/3083	Sunbeam Rapier III a Singer Gazelle III a	470 - 490
25/3013	Sunbeam Rapier III	470 - 490
25/3037	Sunbeam Rapier III	470 - 490
25/3047	Sunbeam Rapier III	470 - 490
25/3076	Sunbeam Rapier III	470 - 490

Serial No.	Model	Hydraulic Pressure P.S.I.
25/3117	Hillman Minx & Singer Gazelle	470 - 490
32/1526	Hillman Minx & Singer Gazelle	470 - 490
32/1536	Hillman Minx & Rapier II	470 - 490
32/3004	Hillman Minx & Rapier II	470 - 490
25/3314	Sunbeam Alpine III Sunbeam Rapier III a Humber Sceptre	470 - 490
25/3315	Sunbeam Alpine II Singer Gazelle III a Singer Vogue I	470 - 490
32/3017	Hillman Minx Series II	470 - 490
32/3065 32/3074	Supplied to Rootes as Service Unit	470 - 490 470 - 490
32/3075	Hillman Minx & Singer Gazelle	470 - 490
25/3316	Triumph Vitesse	510 - 530
25/3330	Triumph Vitesse	510 - 530
32/1454	Standard 10	470 - 490
32/1554	Standard 10	470 - 490
25/3085	Vauxhall Victor	470 - 490
32/1531	Vauxhall Victor	470 - 490
25/3086	Vauxhall Victor Estate Car	470 - 490
32/3012	Vauxhall Victor Estate Car	470 - 490
32/3051	Volvo P.1800	480 - 500
32/3302	Volvo 122 S	480 - 500
32/3324	Volvo 122 S	480 - 500
32/3325	Volvo P 1800	480 - 500
32/3328	Volvo 122 S	480 - 500
32/3333	Volvo P.1800	480 - 500

APPENDIX 'B'

SPECIAL TOOLS FOR 'A' TYPE OVERDRIVE

Tool No.	Description
L 176 A	Drive shaft oil seal remover adapters. (used with Main Tool 7657)
L 177 A	Drive shaft oil seal replacer
* L 178	Assembly ring for uni-directional clutch
L 179	Piston ring fitting tool $1\frac{1}{8}$" diameter
L 180	Piston ring fitting tool $1\frac{3}{8}$" diameter
L 181	Accumulator O ring replacer
L 182	Accumulator Piston Housing remover
* L 183 A	Oil Pump Body remover (Main Tool)
L 183 A-1	Oil Pump Body remover adapter
* L 183 A-2	Oil Pump Body remover adapter
L 184	Pump Barrel replacer
L 185 A	Dummy drive shaft
L 186	Mainshaft Bearing replacer
L 187	Annulus and Tailshaft Bearing remover and replacer - Adapters (used with hand press RG 4221 B)
* L 188	Hydraulic Test Equipment (pressure gauge)
L 190 A	Tailshaft End Float gauge

* These tools are also suitable for 'D' Type Overdrive.

TOOLS FOR 'D' TYPE OVERDRIVE

L 201	Dummy Mainshaft
L 202	Annulus Tailshaft Remover and replacer adapters (use with hand press RG 4221B).
* L 203	Planet Gear Needle Bearing remover and replacer
L 204	Tailshaft Oil Seal remover adapters (use with Main Tool 7657).
L 205	Oil Pump Body remover - use L 183A and L 183 A-2.
L 206 A	Pump Body replacer
L 207	Operating Piston O ring fitting tool
L 208	Annulus Spigot Bearing remover
L 209	Annulus Spigot Bearing replacer
L 210 A	Clutch Thrust Ring Bearing remover adapter (used with No. 55 Adjustable Puller)
L 211	Tailshaft bearing Nut Wrench
L 212	Tailshaft Oil Seal replacer
L 213	Oil Pump Body Key
L 214	Speedo Drive Gear and Bearing remover
L 215	Clutch Thrust Ring Bearing replacer

* This tool is also suitable for 'A' Type Overdrive

BASIC TOOLS FOR USE WITH SPECIAL ADAPTORS

Tool No.	Description
7657	Oil Seal remover (Main Tool)
RG 4221 B	Handpress
S 4221 A	Handpress
No. 55	Adjustable Puller

All the above tools are manufactured by and available from :-

V.L. Churchill & Co. Ltd.,
Great South West Road,
Bedfont,
FELTHAM,
Middlesex.

APPENDIX 'C'

DIMENSIONS 'A' TYPE

	Dimensions New	Clearances New
PUMP		
Plunger diameter	.3742"/.3746"	.0002"/.0016"
Pump Body Bore	.3748"/.3758"	
Pin for Roller diameter	.2497"/.2502"	.0007"/.0022"
Roller Bore diameter	.2510"/.2520"	
PUMP ROLLER BUSH		
Outside diameter of Bush	.3736"/.3745"	.0005"/.0023"
Inside diameter of Roller	.3750"/.3759"	
Inside diameter of Bush	.2510"/.2518"	.0007"/.0020"
Outside diameter of Pin	.2497"/.2502"	
ACCUMULATORS		
$1\frac{1}{8}$" Piston diameter	1.1232"/1.1241"	.0004"/.0023"
$1\frac{1}{8}$" Housing Bore diameter	1.1245"/1.1255"	
$1\frac{1}{2}$" Piston diameter	1.4982"/1.4991"	.0004"/.0023"
$1\frac{1}{2}$" Housing Bore diameter	1.4995"/1.5005"	
$1\frac{3}{4}$" Piston diameter	1.7479"/1.7489"	.0006"/.0026"
$1\frac{3}{4}$" Bore diameter	1.7495"/1.7505"	
OPERATING PISTONS		
Piston diameter	1.3732"/1.3741"	.0004"/.0023"
Bore diameter	1.3745"/1.3755"	
OPERATING VALVE		
Valve diameter	.2494"/.2497"	.0003"/.0012"
Bore diameter	.2500"/.2506"	
GEAR TRAIN		
Planet Pin diameter	.4372"/.4375"	
Planet Gear Bore (caged bearing)	.6245"/.6250"	
End Float of Sunwheel		.0080"/.0140"

	Dimensions New	Clearances New
OVERDRIVE MAINSHAFT		
Diameter at Steady Bushes	1.1544"/1.1553"	.0029"/.0048"
Inside diameter of Bushes	1.1582"/1.1592"	
Diameter at Sunwheel	1.1544"/1.1553"	.0029"/.0048"
Inside diameter of Sunwheel Bush	1.1582"/1.1592"	
Diameter at Spigot Bearing	.6235"/.6242"	.0008"/.0025"
Inside diameter of Spigot Bearing	.6250"/.6260	
MISCELLANEOUS		
Clutch Movement from direct to Overdrive	.0800"/.1200"	

DIMENSIONS 'D' TYPE

	Dimensions New	Clearances New
PUMP		
Plunger diameter	.3742"/.3746"	.0002"/.0016"
Pump Body Bore	.3748"/.3758"	
Pin for Roller diameter	.2497"/.2502"	.0007"/.0022"
Roller Bore diameter	.2510"/.2520"	
PUMP ROLLER BUSH		
Outside diameter of Bush	.3736"/.3745"	.0005"/.0023"
Inside diameter of Roller	.3750"/.3759"	
Inside diameter of Bush	.2510"/.2518"	.0007"/.0020"
Outside diameter of Pin	.2497"/.2502"	
RELIEF VALVE		
Relief Valve Plunger diameter	.3122"/.3127"	.0002"/.0013"
Relief Valve Body Bore diameter	.3129"/.3135"	
Operating Piston diameter	.8735"/.8742"	.0003"/.0020"
Operating Piston Bores	.8745"/.8755"	
Operating Valve diameter	.2494"/.2497"	.0003"/.0012"
Operating Valve Bore	.2500"/.2506"	
GEARBOX MAINSHAFT		
Diameter at Hub Bush	.9236"/.9244"	.0040"/.0060"
Bush Internal diameter	.9284"/.9296"	
Diameter at Sunwheel	.8730"/.8740"	.0030"/.0050"
Inside diameter of Sunwheel Bush	.8770"/.8780"	
Diameter at Steady Bearing	.5620"/.5625"	
Planet Pins diameters		
25%	.4372"/.4375"	
32%	.5620"/.5625"	
MISCELLANEOUS		
Clutch Movement from direct to Overdrive	.0400" - .0600"	

Laycock

LAYCOCK-DE NORMANVILLE OVERDRIVE UNITS

Fault diagnosis and rectification

Issued by Service Department
LAYCOCK ENGINEERING LTD., SHEFFIELD 8
Phone SHEFFIELD 368221

LAYCOCK-DE NORMANVILLE OVERDRIVE UNITS

Fault diagnosis and rectification

THE Laycock-de Normanville overdrive unit was first produced in 1949. Since then it has been offered as standard or optional equipment on most British cars, and on some foreign vehicles.

Two basic types of unit, known as "A" and "D", are produced. The former is used on cars of two litres upwards; the "D" type on smaller models.

Both units are pressurised by a plunger type pump, cam operated from the input shaft. Oil is drawn through a filter and delivered to the operating valve. Type "A" incorporates a hydraulic accumulator in the system, type "D" a relief valve. Pressures vary according to the installation but on larger units it is usually between 360-520 lb sq. in and in the smaller about 480 lb. sq. in.

Being interconnected, the gearbox and overdrive use a common oil supply, the level of which is indicated by the level plug or dipstick of the gearbox. Although the overdrive unit is filled through the gearbox, separate drain plugs are provided and both must be removed when draining. The overdrive has a gauze filter which should be cleaned whenever the oil is changed. Great care must be taken to avoid entry of dirt whenever any part of the casing is opened.

DIAGNOSIS OF FAULTS

If the overdrive does not operate properly check the oil level in the gearbox/overdrive unit. If low, top up with fresh oil and retest the operation before making a detailed investigation. Before dismantling any part of the overdrive, release all hydraulic pressure from the system by operating the solenoid several times. To avoid unnecessary dismantling check for cause in the order listed under the heading below. (Note: To obtain a hydraulic pressure reading on "D" type, overdrive must be engaged.)

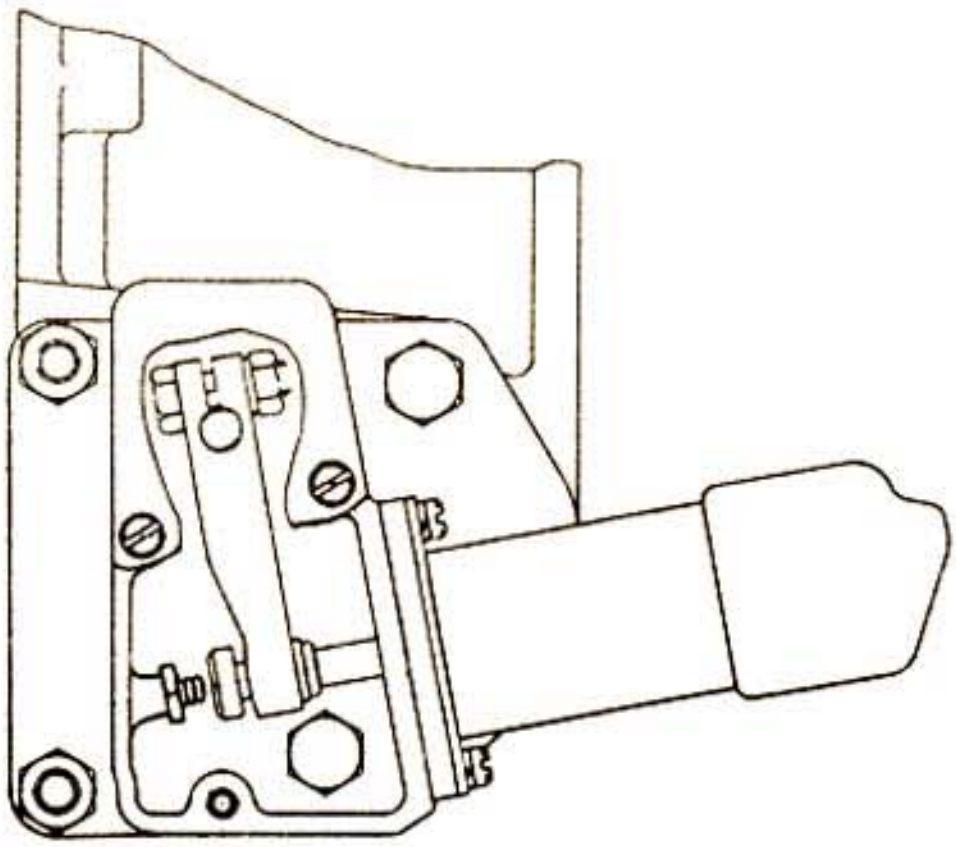

Fig. 1

OVERDRIVE DOES NOT ENGAGE

1. Insufficient oil in unit.
2. Solenoid not operating due to fault in electrical system.
3. Solenoid operating lever out of adjustment.
4. Insufficient hydraulic pressure due to pump non-return valve incorrectly seating (probably dirt on seat).
5. Insufficient hydraulic pressure due to worn accumulator on "A" type, sticking or worn relief valve in "D" type.

OVERDRIVE DOES NOT RELEASE

(Note: Do not attempt to reverse car or damage may be caused within the overdrive.)

1. Fault in electrical control system.
2. Blocked restrictor jet in operating valve.
3. Solenoid operating lever adjustment.
4. Sticking clutch.
5. Solenoid Stop incorrectly set.

CLUTCH SLIP IN OVERDRIVE

As 1, 3, 4, and 5 under "Overdrive does not engage."

CLUTCH SLIP IN REVERSE AND FREE WHEEL ON OVER-RUN

1. Solenoid operating lever out of adjustment.
2. Partially blocked restrictor jet in operating valve.
3. Solenoid Stop incorrectly set.

ADJUSTMENT OF SOLENOID OPERATING LEVER

The solenoid operates a lever which is fastened to a shaft carrying the operating valve cam. In "A" type units the lever is clamped to the shaft to facilitate adjustment (Fig. 1) with a setting arm on the opposite side of the unit. With the solenoid

energised the $\frac{3}{16}$ in. hole in the setting arm should align with a similar hole in the casting.

Alignment of the holes should be checked by inserting the shank of a $\frac{1}{8}$ in. drill. The same procedure applies with the "D" type unit but here the setting hole is in the solenoid lever and the adjustment is made by tightening or loosening a self-locking nut on the solenoid plunger until the holes align.

THE PUMP VALVE

In "A" type units the pump valve is an integral part of the pump body and to gain access the solenoid bracket has to be removed. After removing the valve plug, washer, spring, plunger and ball clean the seat then reseat the ball by giving it a sharp tap with a suitable hammer and drift. The "D" type has a detachable pump valve accessible from beneath the unit when the centre plug is removed. The pump valve must be removed before reseating.

THE OPERATING VALVE

The operating valve plug is located on the top of the unit. After removing the plug, spring, plunger and ball withdraw the operating valve by inserting a piece of stiff wire and drawing it up. Examine the .030 bleed off hole which breaks through to the centre drilling near the bottom of the valve (Fig. 2).

Fig. 2

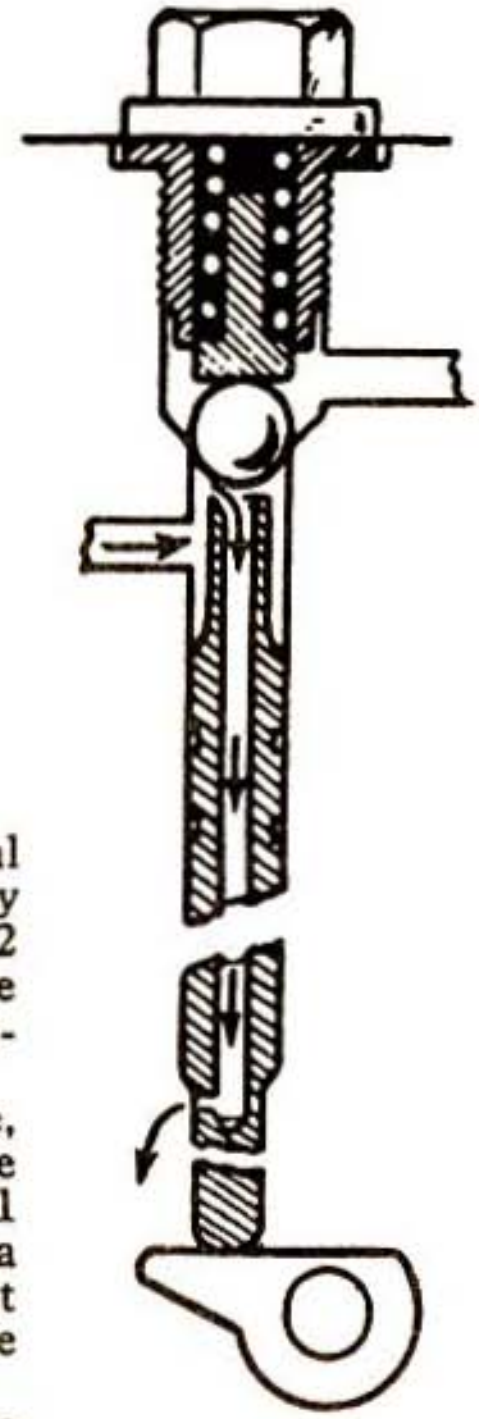

THE ELECTRICAL CIRCUIT

The method of controlling the overdrive differs according to the requirements of the various car manufacturers, but the basic system is illustrated in Fig. 3. If the overdrive does not operate and the wiring has been checked proceed as follows:—

With ignition on, top gear engaged and manual switch made:—

1. Connect a test lamp or voltmeter between terminal C2 of the relay and earth. If C2 is found to be live suspect the solenoid.
2. If C2 is not live, using the same method check C1 and W1 and if a reading is not obtained examine the fuse.
3. If C1 and W1 are live but C2 is not, take a lead from W2 to earth. This should energise the relay coil and close the points bridging C1 and C2 thus making C2 live. If after the above test C2 is still not live suspect the relay unit but if C2 has become live suspect the manual or gear cut-out switch and proceed to test 4.
4. Bridge each switch in turn to prove which is faulty.

A continuous buzzing when the solenoid is energised indicates the holding coil is burnt out and the solenoid should be replaced.

Fig. 3

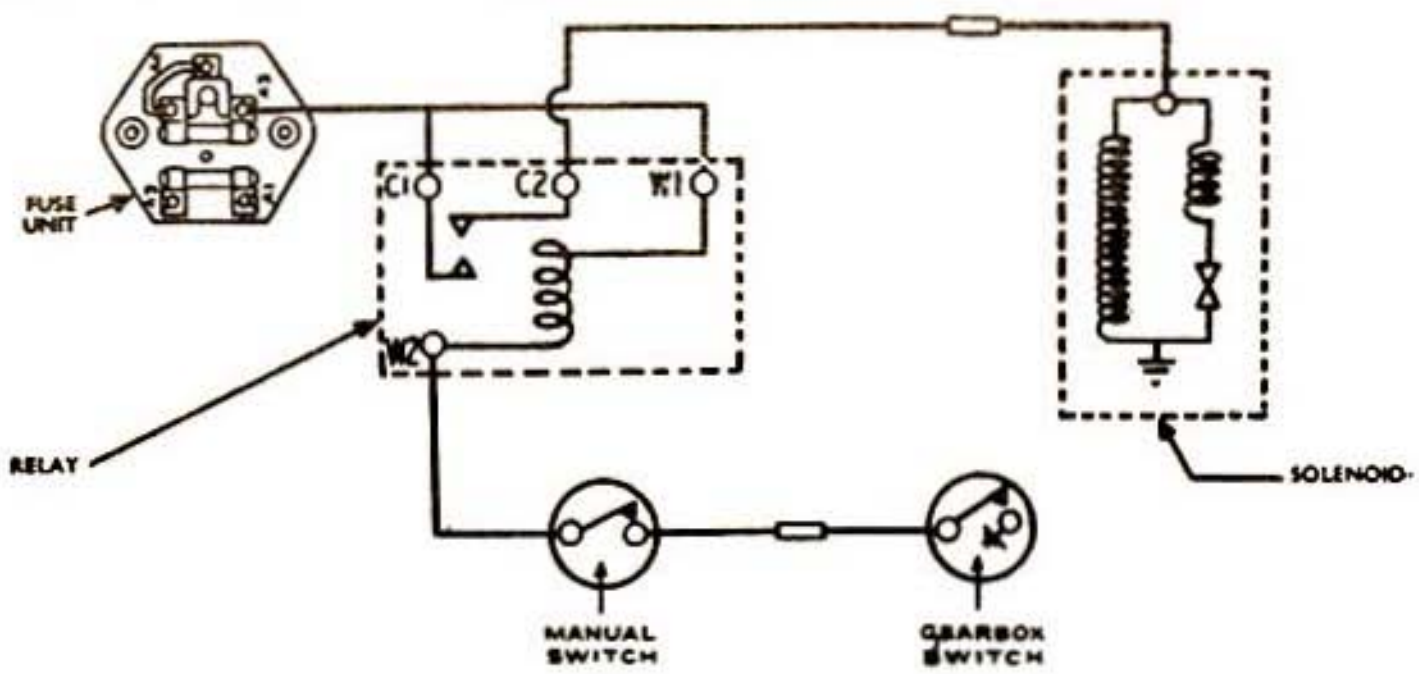

Laycock

LAYCOCK-DE NORMANVILLE OVERDRIVE

SECTION 3

DISMANTLING, INSPECTING AND ASSEMBLING 'A' TYPE OVERDRIVE

LAYCOCK ENGINEERING LIMITED,
Archer Road, Millhouses, SHEFFIELD, S8 OJY.
Telephone: 0742- 368221
Telegrams: INVENTION SHEFFIELD
Telex: 54255
A Member of The G.K.N. Group of Companies

KEY TO FIGURE 20

1. Clutch Thrust Ring Assy.
2. Clutch Return Springs
3. Clutch Sliding Member
4. Thrust Ballrace
5. Circlip
6. Circlip
7. Brake Ring
8. Sunwheel Assy.
9. Planet Carrier Assy.
10. Annulus Assy.
11. Bronze Thrust Washer
12. Bronze Thrust Washer
13. Steel Thrust Washer
14. Cage (Uni-Directional Clutch)
15. Rollers (Uni-Directional Clutch)
16. Spring (Uni-Directional Clutch)
17. Inner Member (Uni-Directional Clutch)
18. Thrust Washer
19. Annulus Front Ballrace
20. Annulus Rear Ballrace
21. Selective Spacing Washer
22. Rear Casing
23. Studs
24. Speedometer Pinion
25. Speedometer Pinion Pilot Bush
26. Speedometer Pinion Support Bush
27. Dowel Screw
28. Copper Washer
29. Rear Oil Seal
30. Coupling Flange
31. Coupling Flange Nut
32. Plain Washer
33. Overdrive Joint Washer
34. Pump Operating Cam
35. Bridge Piece
36. Operating Pistons
37. Sealing Ring
38. Operating Valve
39. Breather
40. Operating Valve Plug
41. Operating Valve Spring
42. Operating Valve Spring Plunger
43. Operating Valve Ball
44. Support Bushes
45. Main Casing
46. Guide Peg
47. Pump Plunger
48. Pump Roller
49. Pump Roller Pin
50. Pump Plunger Spring
51. Pump Body
52. Pump Body Screws
53. Pump Body Base Plug
54. Oil Filter
55. Sealing Washer
56. Drain Plug
57. Non Return Valve Ball
58. Non Return Valve Plunger
59. Non Return Valve Spring
60. Non Return Valve Plug
61. Valve Setting Lever
62. 'O' Ring
63. Cam Lever
64. Operating Lever Shaft
65. Solenoid Bracket Joint
66. Solenoid Bracket
67. Rubber Stop
68. Distance Collar
69. Operating Lever
70. Solenoid Cover Joint
71. Solenoid Cover
72. Solenoid
73. Sealing Disc
74. Accumulator Sleeve
75. 'O' Ring
76. Piston Rings
77. Accumulator Piston
78. Accumulator Spring
79. Accumulator Tube

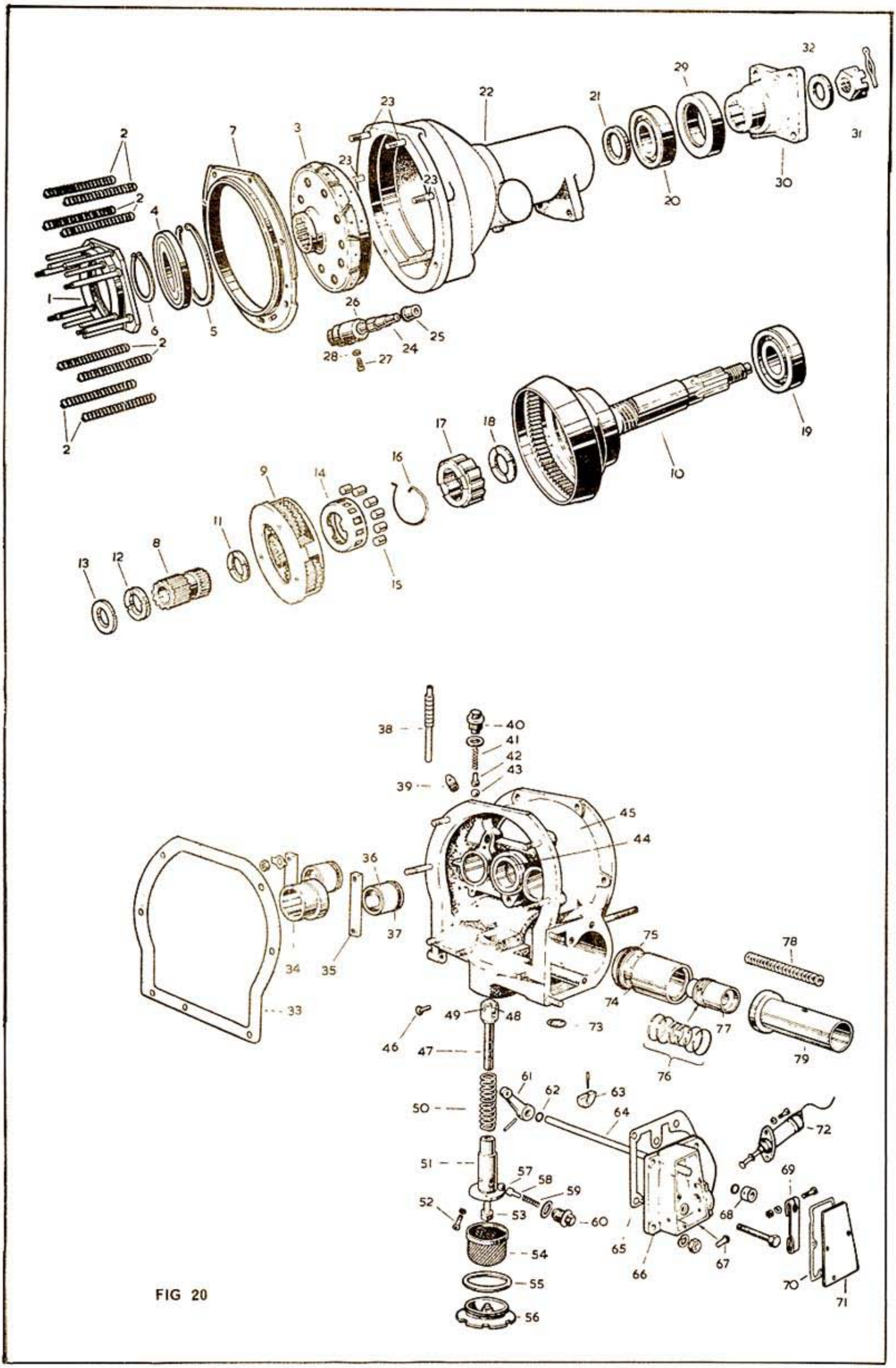
1
2
3
4
5
6
7
8
9
10
11
12
13
14
15
16
17
18
19
20
21
22
23
24
25
26
27
28
29
30
31
32
33
34
35
36
37
38
39
40
41
42
43
44
45
46
47
48
49
50
51
52
53
54
55
56
57
58
59
60
61
62
63
64
65
66
67
68
69
70
71
72
73
74
75
76
77
78
79

FIG 20

OVERDRIVE REMOVAL

The overdrive unit may be removed without taking the gearbox from the car providing that sufficient clearance 7.0" (177 mm) exists to allow the overdrive to be moved rearwards. However, it is usually more convenient to remove the gearbox and overdrive complete. Whichever means is adopted proceed as follows -

The unit is split at the rear face of the adapter casing. It will be seen that there are four or five short studs and two long studs (or in some cases bolts). Remove the nuts from the short studs first, then simultaneously loosen the nuts on the long studs, thus releasing the pressure on the clutch return springs. Pay attention to the degree of stiffness which is given to these two nuts by the pressure of the clutch springs, so that extra pressure required to re-tighten these nuts later on will be anticipated. Remove the two nuts, then the overdrive unit can be withdrawn off the mainshaft.

The overdrive can be divided into four main assemblies -

1. FRONT CASING AND BRAKE RING
2. CLUTCH SLIDING MEMBER
3. PLANET CARRIER AND GEAR TRAIN
4. REAR CASING AND ANNULUS

DISMANTLING

IMPORTANT

SCRUPULOUS CLEANLINESS MUST BE MAINTAINED THROUGHOUT ALL SERVICE OPERATIONS. EVEN MINUTE PARTICLES OF DUST OR DIRT, OR LINT FROM CLEANING CLOTHS MAY CAUSE DAMAGE, OR AT BEST INTERFERE WITH CORRECT OPERATION.

Prepare a clean area in which to lay out the dismantled unit, and some clean containers to receive the small parts.

In installations where the oil supply is common with the gearbox, it follows that the same high standards of cleanliness must be maintained, when servicing the gearbox.

SPECIAL TOOLS

A complete list of special tools can be obtained, as listed in Appendix 'B'.

For the initial examination, dismantle into the four main assemblies proceeding as follows :-

Hold the overdrive with front casing uppermost in a vice fitted with suitable soft jaws.

Remove all the clutch return springs from their pins, noting that the four springs nearest to the centre of the unit are shorter than the outside springs.

Release the tabwashers locking the four ¼" nuts, retaining the operating piston bridge pieces. Remove the nuts, tabwashers and bridge pieces.

Remove the six nuts which secure the front and rear casings. (On some units it may be necessary to remove the solenoid in order to gain access to one of the nuts). Separate the two casings. The brake ring is spigoted into each half and may remain attached to the front half, if not a few taps with a mallet around its flange will remove the brake ring from the rear casing.

Remove one steel and one bronze thrust washer from the forward end of the sunwheel, noting their positions.

Lift out the clutch sliding member complete with the thrust ring and bearing.

Lift out the sunwheel and the bronze washer situated in the recess in the planet carrier.

NOTE In the case of the 22% unit, it is not possible to remove this washer because the planet gears overlap it. Lift out the planet carrier assembly.

The overdrive is now divided into the four main assemblies.

FRONT CASING AND BRAKE RING

If on road test the hydraulic system was performing correctly and there has been no major failure causing metal dust etc., it should not be necessary to dismantle this assembly any further, but if it is, proceed as follows :-

Remove the operating valve plug, lift out the spring, plunger and ball, remove the operating valve by lifting from underneath and grasping it as it protrudes from the casing. Place all the components in a clean container, taking care not to damage the valve seating.

Remove the operating pistons by gripping the centre bosses with a pair of pliers and applying a rotary pull.

The Solenoid

To remove the solenoid, first take off the solenoid cover plate (when fitted). Remove the two screws and pull off the solenoid, ease the plunger out of the yoke of the valve operating lever.

Release the clamp bolt on the valve operating lever; remove the lever and the collar under it from the valve operating shaft.

The Accumulator

Access to the accumulator is gained by removing the solenoid bracket as follows. First remove the nuts from the studs then simultaneously loosen the two setscrews painted red, securing the bracket to the casing.

The setscrews are of sufficient length to allow the accumulator spring to be completely released, AND SHOULD ALWAYS BE REMOVED AFTER THE NUTS.

After removing the bracket, the accumulator spring is exposed.

There are three alternative sizes of accumulator piston, namely, $1\frac{1}{8}$" diameter, $1\frac{1}{2}$" diameter and $1\frac{3}{4}$" diameter.

The $1\frac{1}{8}$" diameter has one spring and a tube.

The $1\frac{1}{2}$" diameter has two springs and a tube.

The $1\frac{3}{4}$" diameter has two springs and no tube.

Remove the springs and tube, whichever is applicable.

The accumulator sleeves for the $1\frac{1}{8}$" diameter and $1\frac{1}{2}$" diameter piston are removed with the aid of special tools L 182 and L 216 respectively. Insert the special tool into the accumulator sleeve and tighten the lower wing nut. Withdraw the accumulator sleeve and piston complete by applying a rotary pull to the upper wing bolt of the tool Fig. 21. Place the assembly into a clean container to avoid soiling or damaging the rubber sealing rings.

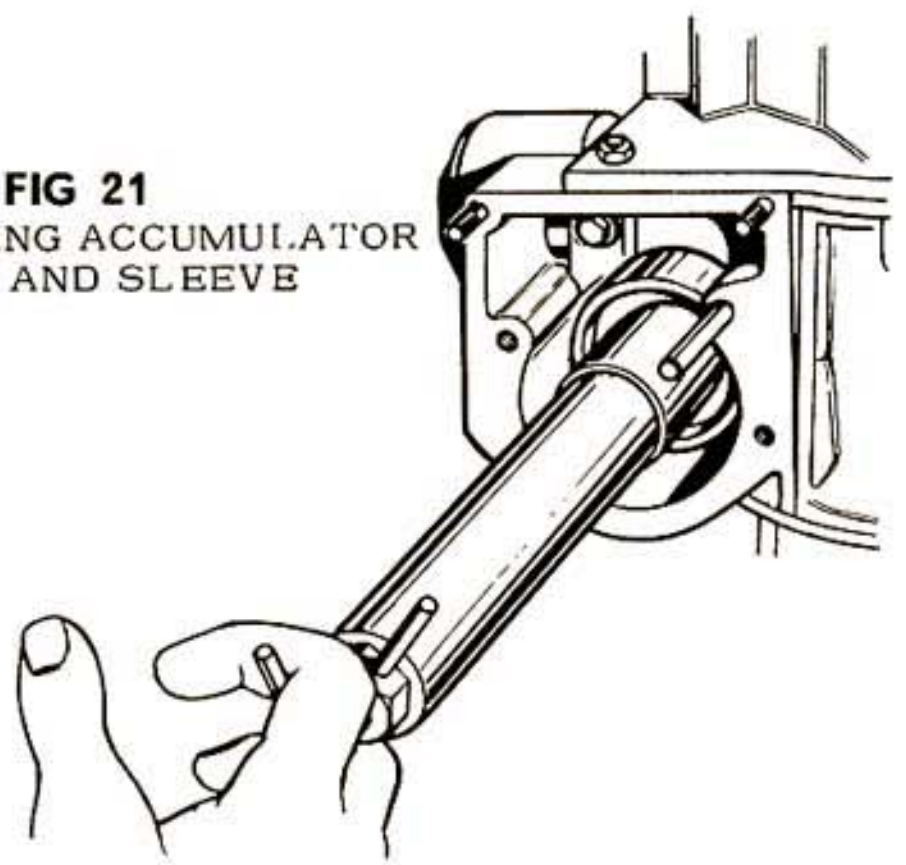

FIG 21
REMOVING ACCUMULATOR PISTON AND SLEEVE

The $1\frac{3}{4}$" diameter piston is removed by screwing a $\frac{1}{8}$" UNF screwed rod into the piston and withdrawing it with a rotary pull.

The Pump Non-Return Valve

This valve is located in the cavity exposed by removing the solenoid bracket and is adjacent to the accumulator bore. Remove the hexagon plug Ref. 60, and lift out the spring plunger and $\frac{1}{4}$" diameter ball.

The Filter

Remove the brass drain plug, Ref. 56, lift out the filter Ref. 54. Located in the recess of the plug, are 3 magnetic plastic rings.

IMPORTANT

IT IS IMPERATIVE THAT THE PUMP NON-RETURN VALVE IS REMOVED BEFORE ATTEMPTING TO REMOVE THE PUMP

Pump

To remove the pump, remove the filter and pump non-return valve as described on page 4. Remove the two pump retaining screws Ref. 52 and the base plug Ref. 53. The pump body can now be extracted, using Tool No. L 183 as follows :-

Screw the short threaded portion of the spindle into the pump body from where the base plug was removed then place the adapter in position against the casing and screw up the wing nut, thereby pulling the body out of the casing: the plunger and spring will then be removed during this process Fig. 22.

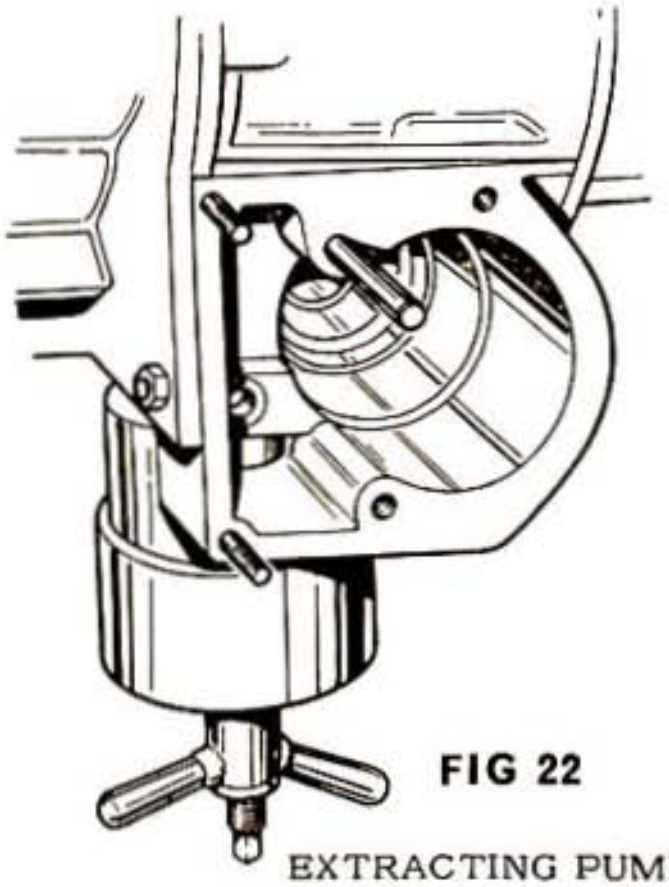

FIG 22

EXTRACTING PUMP

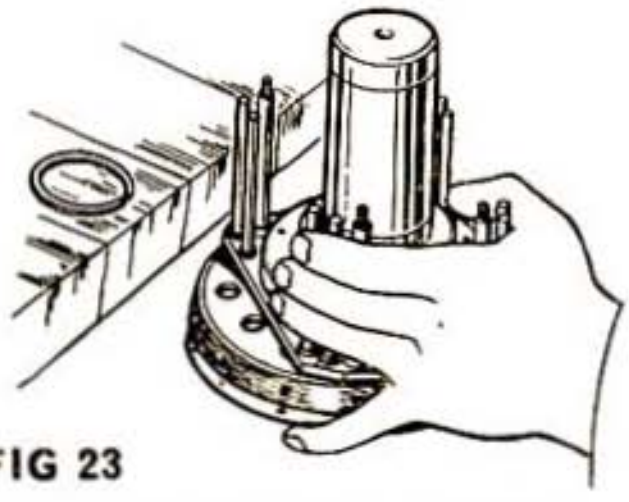

FIG 23

DISMANTLING CONE CLUTCH AND THRUST RING ASSEMBLY

CLUTCH SLIDING MEMBER

Remove the thrust ring complete with bearing from the sliding cone clutch member by withdrawing the circlip from its groove in the forward end of the clutch hub and pressing out the clutch member. Care must be taken not to distort the clutch member or damage the linings.

Remove the thrust bearing Ref. 4 from the thrust ring by removing the large circlip Ref. 5 and pressing out the bearing Fig. 23.

PLANET CARRIER ASSEMBLY

At this stage inspect all the gear teeth for any signs of damage or chipping, and assess the fit of the assembled bearing for any excessive clearance.

For models where replacement planet gears are not available separately for servicing, a complete planet carrier sub assembly should be substituted if damage or wear necessitates replacement.

Replacement planet shafts and bearings (except for caged type) are, however, available for all models.

NOTE Caged bearings can only be supplied together with new gears.

In cases where planet gears are available separately, they must be installed in sets of three, even though only one or two of the original planet gears were damaged.

Remove oil seal (if necessary) by screwing the taper thread of the outer member of the special tool (L176) into it and tightening the centre bolt against the rear of the tail shaft. Press annulus forward out of the rear casing. The front bearing should remain assembled to the annulus, leaving the rear bearing in the casing. Remove the distance collar from its shoulder in front of the splines. Withdraw the front bearing from the annulus, using Tool No. L187 in conjunction with handpress No. RG4221B (See Fig. 24). Drive out the rear bearing from the rear casing.

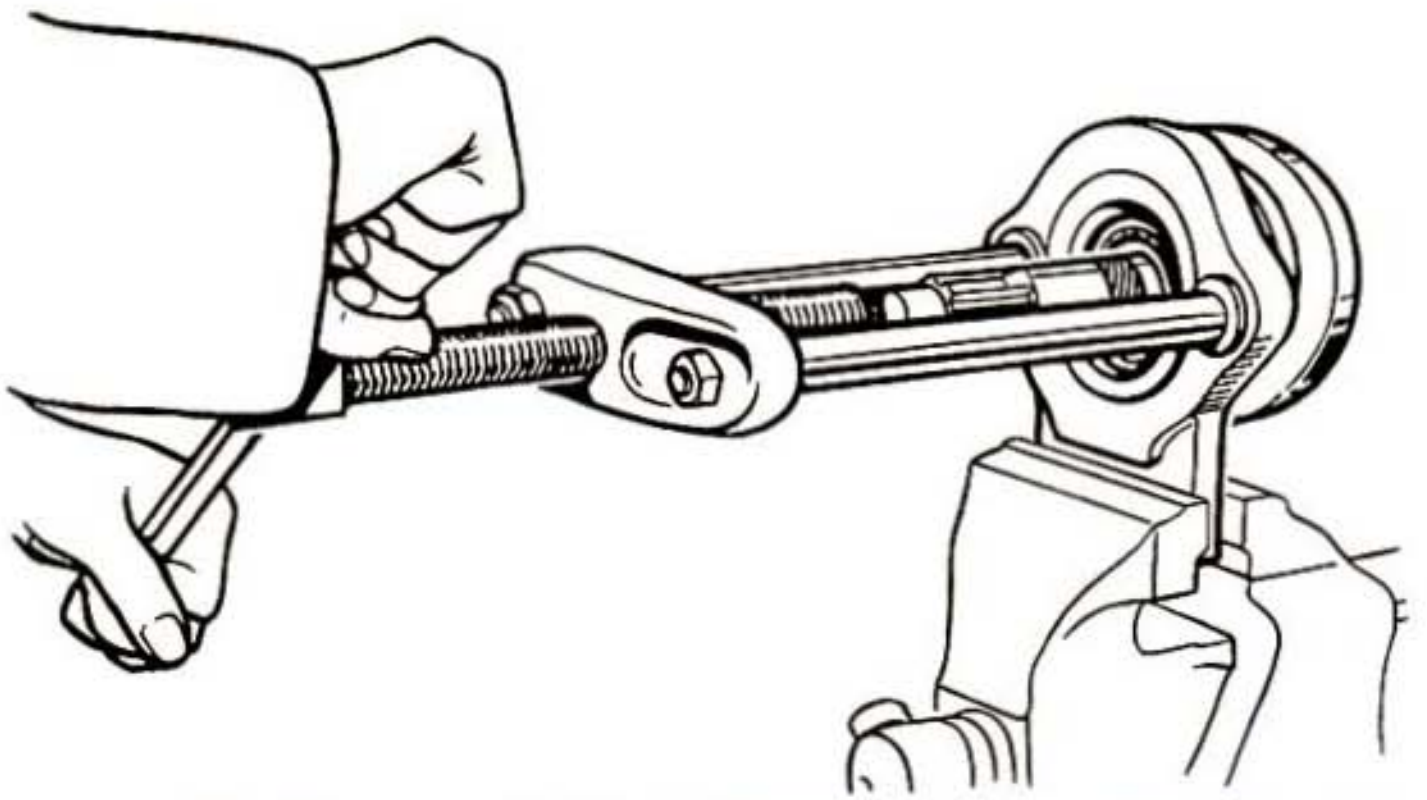

FIG 24 REMOVING FRONT BEARING FROM ANNULUS

INSPECTION

EACH PART SHOULD BE THOROUGHLY CLEANED AND EXAMINED AFTER THE UNIT IS DISMANTLED

FRONT CASING AND BRAKE RING

Inspect the front casing for cracks, damage etc. Examine the bores of the operating cylinders and accumulator for scores or wear.

Check for signs of leaks from the plugged ends of the oil passages. Ensure that the sealing disc beneath the accumulator is tight and not leaking. Inspect the centre bore of the support bushes Ref. 44 for wear and damage. Inspect the bronze and steel thrust washers Ref. 12 - 13.

Check operating pistons Ref. 36 for signs of scores and replace sealing rings Ref. 37 using tool No. L 180 if there is any sign of damage or distortion.

Check pump roller Ref. 48 for any undue wear. The roller pin Ref. 49 is secured by a Mills pin 1/16" diameter, driven vertically into the curved portion of the pump plunger fork. This pin can be sheared by driving the roller pin through the fork. Later units have floating bronze bush in the pump roller, from which the pin is removed in the same way.

Check pump plunger for wear and scores.

Check pump body bore for wear and scores. Check the valve seat and ball to ensure that they are free from nicks and scratches.

Check the pump spring Ref. 50 for distortion.

Check accumulator piston and sleeve (where fitted) for signs of wear or scores. Check that there are no broken piston rings. Check that the 'O' ring on the accumulator sleeve is not damaged. If it is, fit a new one using tool No. L 181.

Check accumulator spring(s) for distortion or collapse.

Inspect the operating valve for distortion and damage. See that it slides easily in the bore of the front casing. Check that the seating at the top is clean and free from scratches. Check that the restrictor jet is clear. Check the ball, and the spring for distortion.

Clean the filter thoroughly in petrol. Remove all metallic particles from the magnetic ring.

Check brake ring Ref. 7 for signs of wear, scoring or cracks.

CLUTCH SLIDING MEMBER

Inspect the clutch linings on the clutch sliding member for any signs of excessive wear or charring. If there is any sign of this at all, the sliding member complete must be replaced. It is not possible to fit only new linings because the faces have to be fine machined to an accurate angle after rivetting.

Inspect the pins for the olutch springs and bridge pieces on the thrust ring Ref. 1 and see that they are tight and not distorted.

Inspect the ball race Ref. 4 and ensure that it rotates smoothly as this can otherwise be a source of noise when running in direct gear.

Inspect the clutch springs Ref. 2 for any sign of distortion or collapse.

PLANET CARRIER AND GEAR TRAIN

If not previously inspected under 'Dismantling' Planet Carrier and Gear Train, the gears and bearings should now be inspected in accordance with instructions given.

Inspect the teeth on the sunwheel Ref. 8 for signs of damage or chips. If the bush is worn a new gear complete must be fitted as the bore has to be machined concentric with gear teeth after sub assembly.

REAR CASING AND ANNULUS

Ensure that the rollers of the uni-directional clutch Ref. 15 are not chipped and that the inner and outer members are free from damage. Check that the cage, particularly the two ears is not damaged. Check that the spring is not distorted or broken.

Inspect the bronze washer fitted between the uni-directional clutch and the annulus.

Inspect the gear teeth of the annulus Ref. 10 for damage.

Inspect the worm speedometer drive gear for wear or damage.

Inspect the conical surface for signs of wear. A bronze spigot bearing is fitted in the annulus under the uni-directional clutch. Inspect this for wear. This bearing has to be machined by the manufacturer after sub-assembly, and therefore cannot alone be replaced in the field. Where necessitated by bearing damage, a new annulus must therefore be used.

Inspect the output shaft ball races Refs. 19 and 20 and confirm that they rotate smoothly.

Inspect the rear oil seal Ref. 29. If it is necessary to remove it, a new one must always be fitted.

Inspect the teeth of the speedometer pinion Ref. 24 for wear.

After this inspection of each part, it will be possible to determine the replacement parts that will be needed.

RE-ASSEMBLY

FRONT CASING AND BRAKE RING

Pump

Fit the oil pump using Tool No. L184 as follows :-

Screw the two guide pegs into two holes in the bottom pump face in the casing from which two cheese-head screws were removed. Insert the pump plunger into the body not forgetting the spring Ref. 50. Insert this assembly into the casing, positioning the flange of the body over the two guide pegs, and locating the flat of the pump plunger against the guide peg Ref. in the front casing adjacent to the central guide bushes.

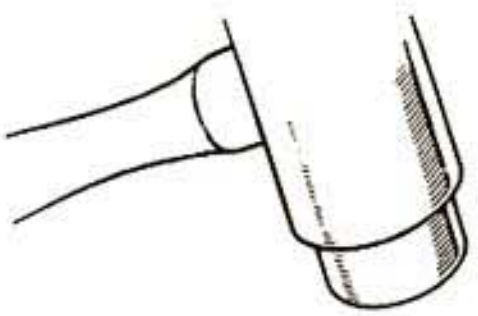

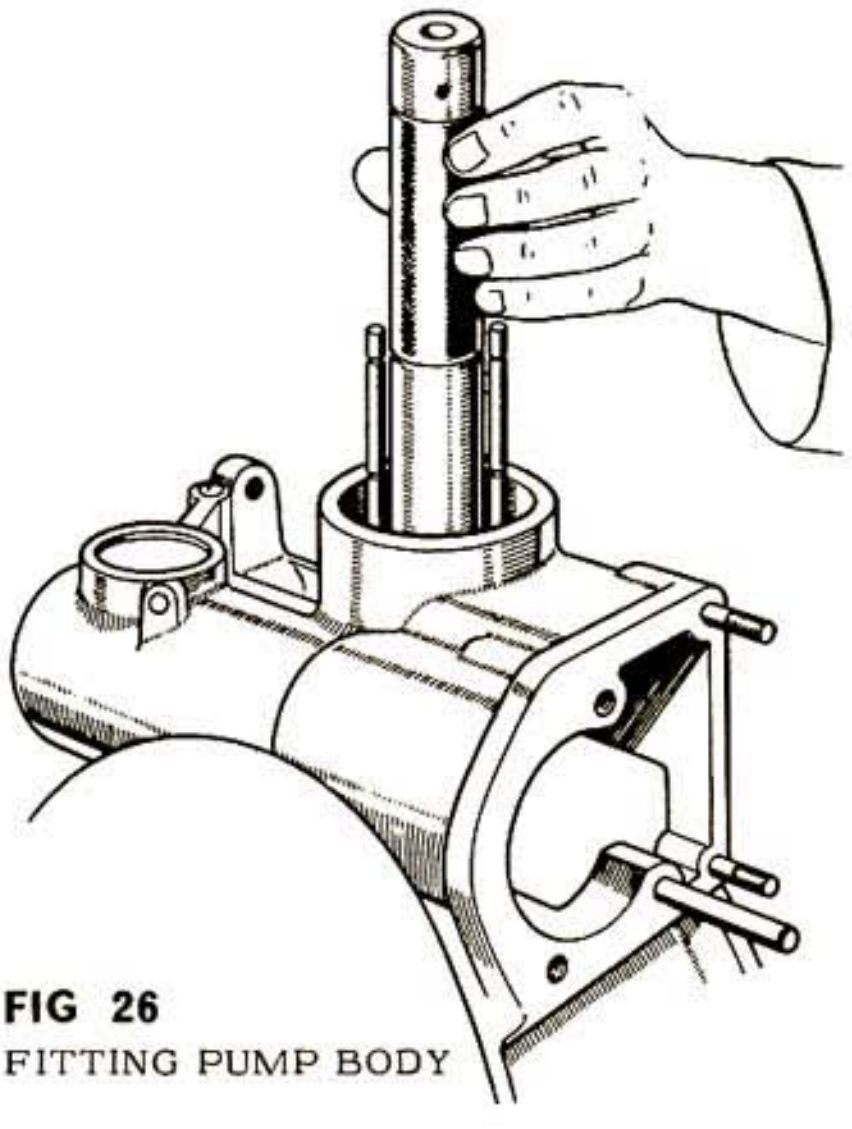

FIG 26
FITTING PUMP BODY

Drive the pump body home using the drift supplied with tool No. L 184. Fig. 26.

Remove the guide pegs and fit the two retaining screws and the base plug.

Fit the filter and magnetic rings locating the filter on the central boss of the drain plug. Tighten the drain plug ensuring that the fibre sealing washer is in good condition.

Drop in non-return valve ball and tap it lightly with a copper drift to seat it. Fit plunger, spring, plug and copper washer ensuring that the latter is located correctly to prevent oil leakage.

Accumulator

$1\frac{3}{4}$" diameter Piston. Carefully insert the piston into the casing; the bore is chamfered to facilitate easy entry of the piston rings.

$1\frac{1}{8}$" and $1\frac{1}{2}$" diameter Pistons. Insert the piston in the sleeve using tool L.179. See Fig. 27.

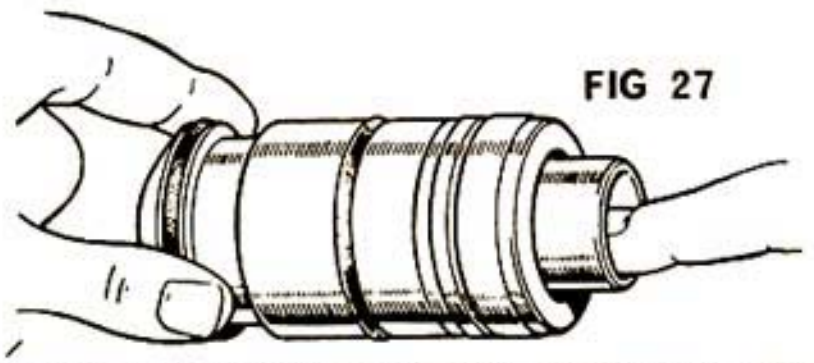

FIG 27

INSERTION OF THE PISTON IN THE SLEEVE

Fit the accumulator tube into the recess in the accumulator sleeve and push the assembly into the casing, easing the sealing rings into the bore. Insert any spring packing washers that were fitted originally into the piston then fit the springs. See Fig. 28.

Fit a new solenoid bracket joint Ref. 65, fit 'O' ring Ref. 62 over the operating shaft. Fit the solenoid bracket ensuring that the tube is perpendicular to the bracket and if a single spring is fitted ensure that the spring is located over the dowel in the bracket. Tighten the bracket down evenly with the two long setscrews and fit the nuts to the studs.

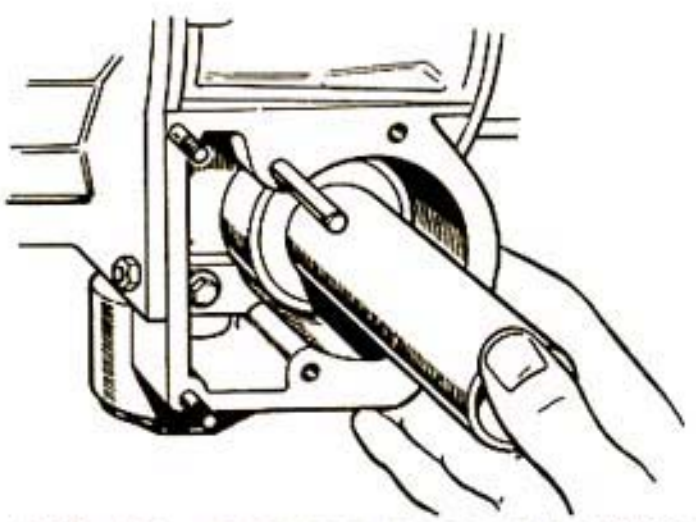

FIG 28 FITTING ACCUMULATOR PISTON, SLEEVE AND SPACING TUBE

Operating Pistons

When inserting the operating pistons, carefully ease the rubber sealing rings into the cylinder bores. The centre bosses of the pistons face towards the front of the unit. See Fig. 29.

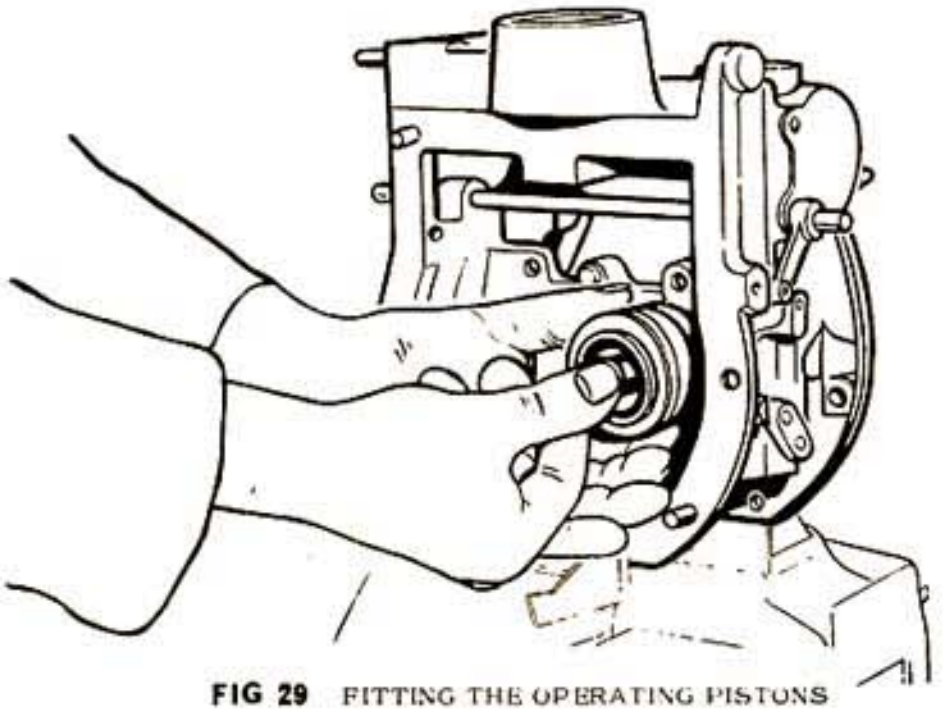

FIG 29 FITTING THE OPERATING PISTONS

Operating Valve

Insert the operating valve into the casing, ensuring that the hemispherical end engages on the flat of the small cam on the operating shaft. Drop in the 5/16" ball, plunger and spring. Screw in and tighten the operating valve plug ensuring that the copper washer is located correctly.

With the exception of the solenoid and operating lever, the front casing is now complete and ready for assembly to the rest of the unit.

PLANET CARRIER AND GEAR TRAIN

To fit new planet bearings using tool No. L 203.

Secure the square ended shank of the tool vertically in a vice, remove the wing nut and the collars, fit guide bush, flange downwards over the shank of the tool. Place gear over guide bush followed by one bearing, spacing collar and wing nut, press the bearing right home. See Fig. 16.

To fit second bearing, remove wing nut, collars and gear, fit guide bush inverted, also gear and proceed as before. See Fig. 17. Treat the other gears similarly.

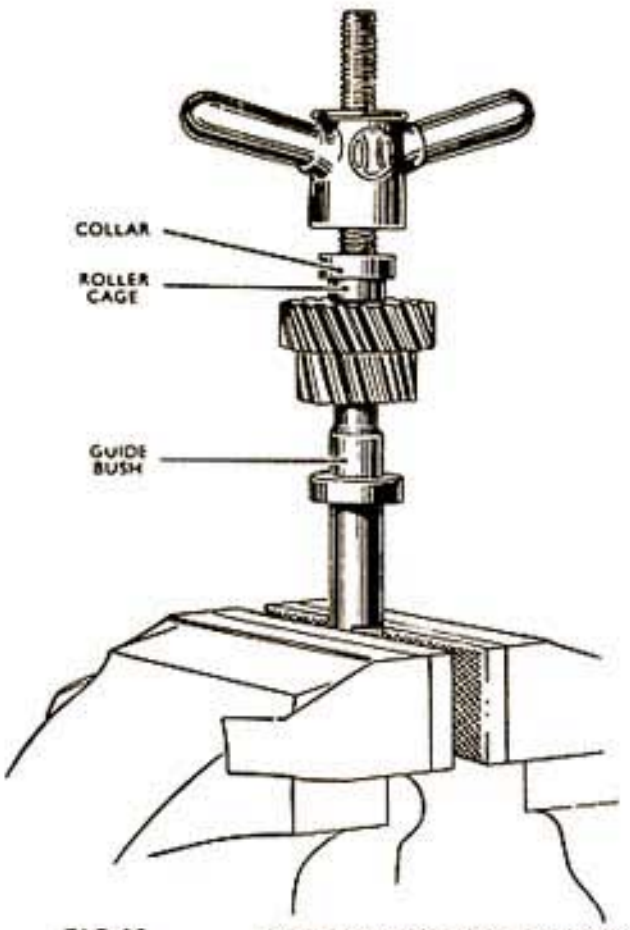

FIG 16 FITTING FIRST DRAWN CUP NEEDLE BEARING

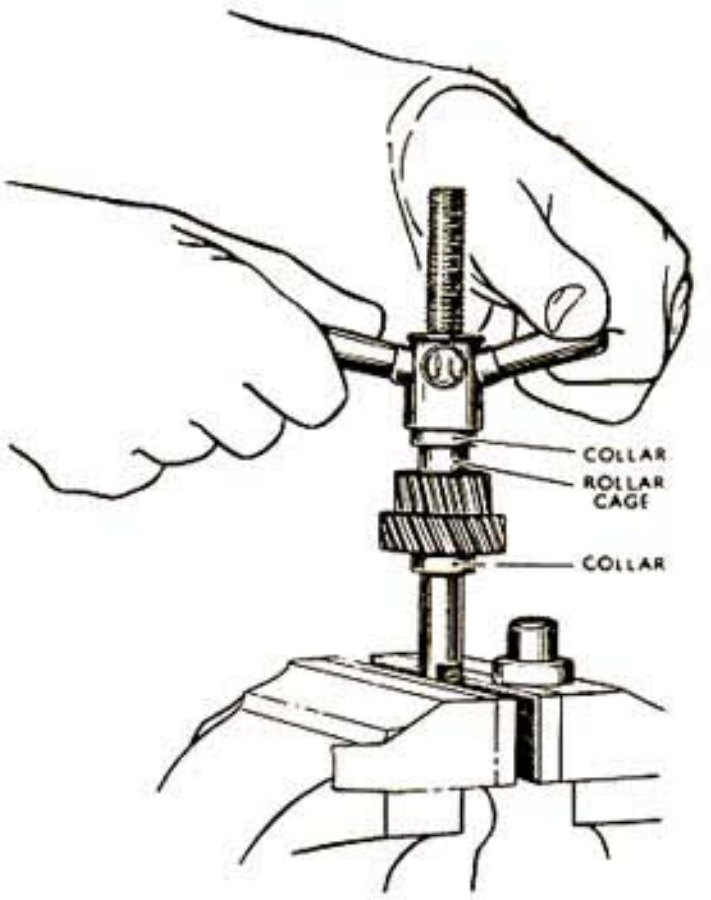

FIG 17 FITTING SECOND DRAWN CUP NEEDLE BEARING

Refit planets to the carrier, ensuring that the thrust washer is in good condition.

NOTE In the case of the 22% planet carrier, the bronze thrust washer located between the rear of the sunwheel and the planet carrier must be fitted before the last planet gear is assembled, because it is not possible to fit the washer when all the gears are assembled.

Fit new 3/32" diameter Mills pins, ensuring that they are a good driving fit in their holes; if not, shorten the pin slightly, drive below the surface of the planet carrier and peen the hole in the carrier over to retain the pin. It is not practicable to fit new gears unless in matched sets. (See page 5 Planet Carrier Assembly). Care must be taken not to damage the oil catcher on the carrier, where fitted.

REAR CASING AND ANNULUS

If any new components are fitted to this assembly, it becomes necessary to re-assess the thickness of the spacing washer Ref. 21 to produce a condition where pre-loading and end float in the support bearings are avoided.

For this purpose a special setting gauge No. L 190A is available, consisting of an outer tubular member, the lower end of which locates against the rear bearing abutment in the overdrive rear casing, and an inner member, the bore of which is of sufficient size to just pass over the rear bearing inner track location on the output shaft, so that the lower end will abut against the shoulder which normally locates the spacing washer to be selected.

A machined bridge piece is fitted across the upper end of the outer member in order to provide a measuring gap between its lower face and the upper machined face of the inner member. This gap represents the actual thickness of the spacing washer required. See Fig. 30.

FIG 30 SPACING WASHER GAUGE

USING SPECIAL TOOL No. L 190A.

Press the front bearing into the rear casing ensuring that its outer track abuts against its shoulder in the casing. Press the annulus into the front bearing in the casing. Do not fit the rear bearing or spacing washer at this stage. Fit the gauge L 190A over the output shaft until the outer member contacts the rear bearing shoulder in the rear casing. Press down the inner member and select the spacing washer which will just fit into the top of the gauge. This washer is available in different thicknesses for selective assembly. See Fig. 31.

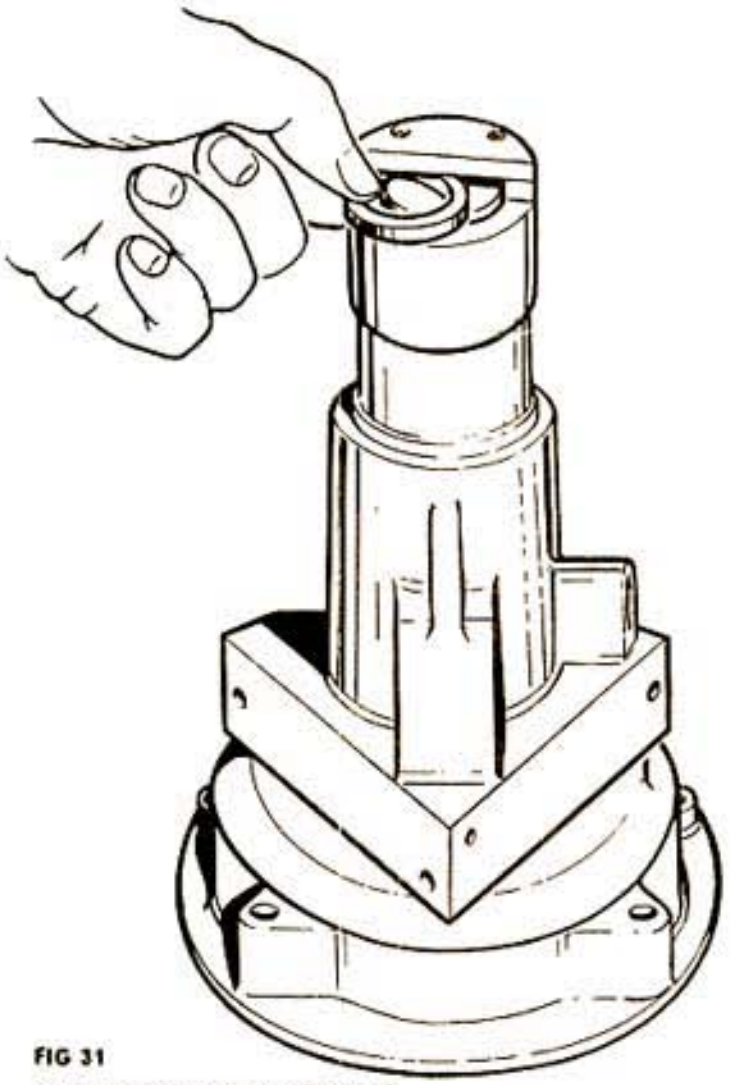

FIG 31
USE OF SPACING WASHER GAUGE

Remove the gauge and fit the selected washer and the rear bearing, driving it in position with tool No. L 186. Fit the rear oil seal, driving it in position with tool No. L 177A. Fit the rear coupling flange.

NOTE Some flanges have a hole drilled to enable the split pin to be inserted; this must be fitted to co-incide with the hole in the shaft.

Fit the washer and nut, split pinning where applicable.

Insert the speedometer pinion gear and bush after ensuring that the 'O' ring is serviceable. Turn the annulus to engage the gear if necessary, align the holes in the casing and the bush, fit the dowel screw and copper washer.

Hold the rear casing and annulus vertically in a vice. Fit the bronze thrust washer Ref. 18 in the recess in the annulus.

Assembling and Fitting Uni-Directional Clutch

Assemble the spring into the roller cage of the uni-directional clutch. Fit the inner member into the cage and engage it on the other end of the spring. Engage the slots of the inner member with the tongues on the roller cage, and see that the spring rotates the cage to urge the rollers, when fitted, up the inclined faces of the inner member. The cage is spring loaded anti-clockwise when viewed from the front.

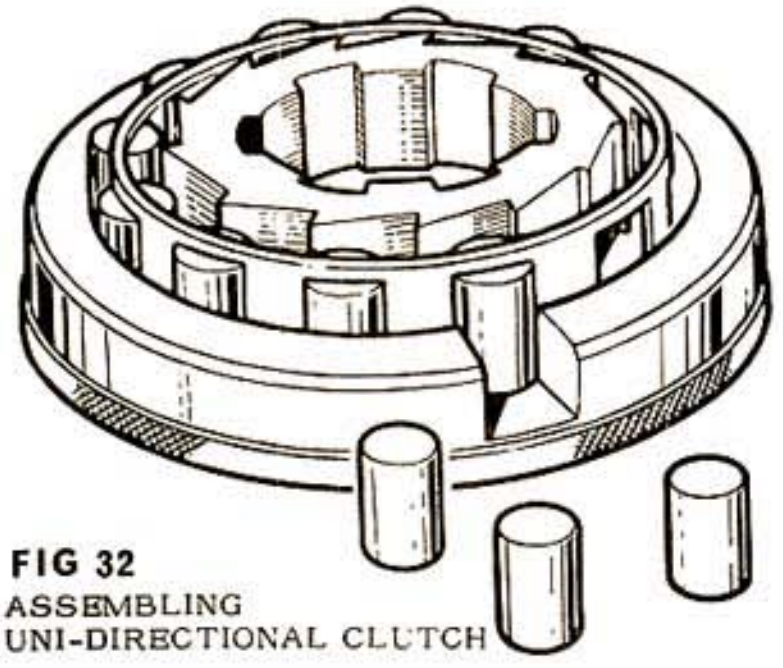

FIG 32
ASSEMBLING
UNI-DIRECTIONAL CLUTCH

Place this assembly, front end downwards, into the special assembly ring, tool No. L 178 and fit the rollers through the slot in the tool, turning the clutch clockwise until all the rollers are in place. See Fig. 32.

Replace the uni-directional clutch assembly, using the special tool to enter the rollers into the outer member in the annulus. Some units have an oil thrower; this is peened into position on top of the uni-directional clutch rollers.

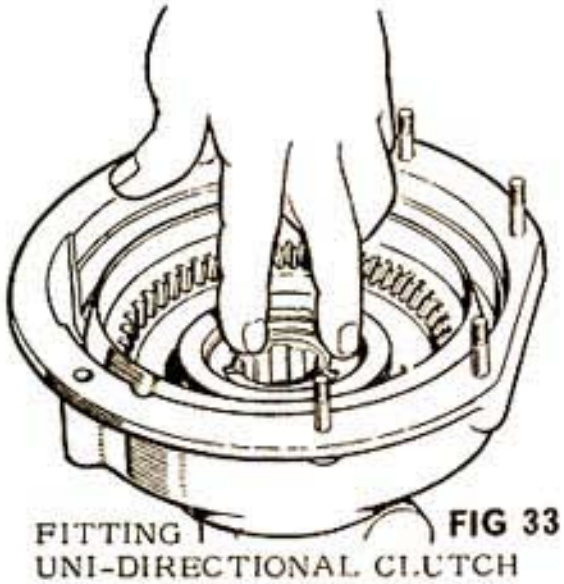

FITTING
UNI-DIRECTIONAL CLUTCH
FIG 33

PLANET CARRIER AND GEAR TRAIN

Where the original planet gears are to be re-used, it is most important that each pinion is returned to the particular planet location from which it was removed. Whether re-using original planets or inserting replacements it is important that each gear should be rotated on its axis

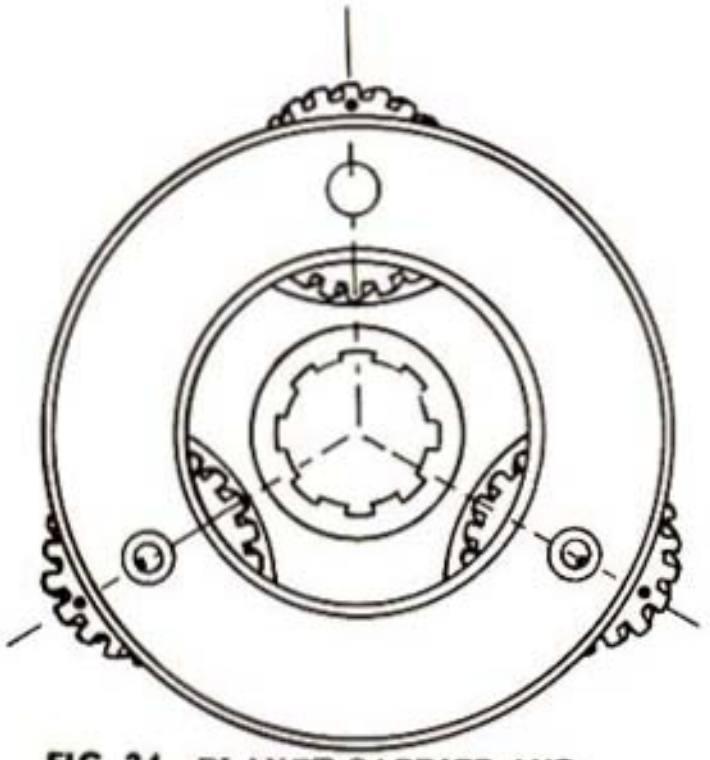

FIG 34 PLANET CARRIER AND GEAR TRAIN

into the correct angular position before re assembly to the annulus, in accordance with the following procedure. Turn each gear respectively until a dot marked on one tooth of the large gear is positioned radially outwards, Fig. 34. Fit the bronze washer Ref. 11 in the recess in the planet carrier. Insert the sunwheel meshing with the planet gears and keeping the dots in the same position, insert this assembly, meshing the gears in the annulus.

Insert the dummy mainshaft tool No. L 185A at this stage, turning the sunwheel until the shaft engages in both the planet carrier and the uni-directional clutch splines. If any new parts have been fitted in connection with the gear or casings, it becomes necessary to check the end float of the sunwheel which should be between .008" and .014" (.20 - .35 mm). To do this proceed as follows :- Fit an extra thrust washer of known thickness on top of the sunwheel, over the dummy shaft, then fit the original bronze and steel thrust washers in that order.

Fit the brake ring to the front casing and tap fully home. Fit the front casing over the dummy mainshaft and offer it up to the rear casing. Due to the extra thrust washer mentioned above, the two casings will not meet fully at their flanges. Measure this gap which will represent the thickness of the extra thrust washer, minus the end float of the sunwheel. If the indicated float is more or less than that required it must be adjusted by replacing the steel thrust washer at the front of the sunwheel by one of less or greater thickness as required.

When the correct thickness washer has been ascertained, remove the front casing and the thrust washers and continue with the main assembly.

CLUTCH SLIDING MEMBER

Re-assemble as follows :- Press the thrust bearing evenly into the thrust ring and fit the large circlip.

Press this assembly on to the hub of the clutch sliding member taking great care not to damage the linings and fit the smaller circlip to the clutch sliding member.

Fit this assembly over the sunwheel splines and engage the inner linings on to the annulus.

Fit the bronze washer on the top of the sunwheel, also the steel selective washer of the correct thickness as previously determined.

Smear liquid jointing compound on both sides of the brake ring flange, and tap this home on the front casing.

Fit the front casing and the brake ring to the rear casing, carefully positioning the Thrust Ring pins, through the four holes in the front casing. Fit and tighten nuts on to the six studs.

NOTE If the unit has a vertically mounted solenoid, a thin nut is fitted to the stud adjacent to the solenoid cap to provide clearance.

Fit the operating piston bridge pieces Ref. 35 using new tabwashers and nuts.

Fit the distance collar Ref. 68 to the operating lever shaft.

Fit the operating lever Ref. 69. Insert the solenoid plunger into the yoke of the valve setting lever; fit the solenoid with the new joint and tighten the two screws.

Adjust the solenoid operating lever as already described on page 5 of Section 1.

Fit the solenoid cover plate (if applicable) and tighten the appropriate screws, ensuring that the joint washer is in good condition.

The overdrive is now complete and ready for fitting to the gearbox.

Inspect the gearbox mainshaft for nicks and burrs. See that all the oil holes are open and clean.

Check the oil pump operating cam for any undue wear.

Fit the cam to the gearbox mainshaft with the long plain end of the cam towards the gearbox.

If the gearbox has been removed from the car, adopt the following procedure :-

Hold the overdrive vertically in a vice with the front casing uppermost.

Fit the clutch return springs to the respective pins on the thrust ring i.e. the longer springs to the outer pegs. This is most important or the springs will become coilbound thus preventing the correct operation of the overdrive.

Remove the dummy mainshaft; the splines will then be correctly lined up.

Fit a new joint to the front face of the overdrive.

Engage top gear, stand gearbox on end, and enter the mainshaft into the overdrive unit. Turn the primary shaft in the gearbox until the splines engage and then turn further until the lowest portion of the cam coincides with the oil pump roller. Position the clutch springs on the respective bosses on the gearbox rear extension. Press the gearbox down to test the cushioning of the springs.

Fit two nuts to the long studs and tighten, evenly compressing the springs, until there is a gap of approximately ¾" between the overdrive casing and the gearbox rear extension, meanwhile ensuring that the oil pump cam does not drop off the splines or the key fall from the mainshaft.

Enter two screw drivers into the gap between the overdrive casing and the gearbox rear extension, with one, compress the oil pump plunger spring and with the other, lever the cam down into alignment with the plunger roller.

Continue tightening the two nuts on the long studs until the faces meet. If the faces fail to meet by about $\frac{3}{8}$" and the nuts become tight, misalignment of the splines is indicated, in which case remove the gearbox from the overdrive again and re-align the splines by rotating the inner member of the uni-directional clutch in an anti-clockwise direction; this can be done by probing with a long screwdriver. Re-check by inserting the dummy mainshaft again.

Re-fit the gearbox to the overdrive following the above procedure.

If the gearbox has been left in the vehicle, the method of fitment remains the same, but particular care must be taken to ensure that the clutch springs are correctly located.