SALISBURY REAR AXLES

First published in
MOTOR TRADER
May 28, 1958

Manufacturers: Salisbury Transmission Co., Ltd., Birch Road, Witton, Birmingham, 6.

WITH very few exceptions, in the modern vehicle the crankshaft axis runs parallel to the length of the frame. Thus it is necessary to turn the drive through 90 deg, while at the same time it is desirable to provide a reduction ratio between the output shaft of the gearbox and the shafts driving the rear wheels. To meet these dual requirements bevel gearing, i.e., a drive gear (crown wheel) and pinion, are used in the majority of cases.

While straight-toothed bevel gears would provide the necessary reduction and change of plane of rotation, these are noisy in operation, and it was soon found that spiral bevel gears ran more quietly and were more robust because they provided greater area of tooth contact for given dimensions. A further development has been hypoid gearing, in which the centre line of the pinion is offset below that of the drive gear. This further increases the area of tooth contact and thus gives even more robust units. the same time it gives quieter running, allows the use of a lower propeller-shaft mounting, permitting a lower floor line to be given to the body. Due to the combined rubbing and meshing action of hypoid gears a special type of lubricant is required which must be used, otherwise wear and failure will occur rapidly.

Except when a vehicle is travelling in a straight line the rear wheels will always be turning at different speeds. This is because on a curve the vehicle follows the diameter of a circle whose radius is coincidental with the axis of the rear wheels, so that the inner wheel is travelling in a smaller circle than the outer one. Unless a vehicle has a very narrow rear track it is necessary to allow for relative rotation between the rear wheels and this is the function of the differential. Torque from the drive gear is applied to two or more bevel gears, free to rotate on a shaft, which mesh with bevel gears on the axle shafts (half shafts). While the torque is normally divided equally between the two axle shafts, the rotation of the one shaft with relation to the other is not opposed.

With the above type of differential it is apparent that if one wheel is free to turn the other will remain stationary. Thus if one wheel starts to skid on, say, an icy road, the vehicle will not be driven forward. A modified type of differential is possible which allows gradual "creep" between the two axle shafts but which will transmit torque to both shafts even if one is free to turn.

Still the most common form of rear-axle suspension, although subject to much variation in detail, is the Hotchkiss drive. In this design the wheels are mounted on a rigid rear axle which is anchored to semi-elliptic springs retained on the chassis frame. Driving and rear axle braking torques are transferred to the chassis frame via the springs, which, therefore serve a double purpose. Since with this arrangement the axle will not only tilt, but its distance from the gearbox will vary, the propeller shaft is of the open type with universal joints at either end and a sliding coupling, now often embodied in the gearbox.

One of the disadvantages of this system is that the rear axle is part of the unsprung weight. For special applications, such as sports cars, it may be desired to reduce unsprung weight to a minimum, despite the increased costs of a more complicated arrangement. To reduce unsprung weight, the final drive and differential are made as a separate unit supported on the chassis frame while the wheels, either independently sprung or on a separate lightweight rigid rear axle, called a de Dion axle, are driven by universally jointed drive shafts. Salisbury axles models 3HU and 4HU are compact final drive and rear axle units suitable for this purpose.

Apart from the above applications it will be seen that the rear axle supports a proportion of the weight of the vehicle as well as conveying drive to the wheels. Since the axle casing and drive shafts are both available for supporting the weight of the vehicle a number of different hub arrangements are possible. These vary from mounting the wheels direct on axle shafts supported in journal bearings and retained at their inner ends (non-floating) to mounting the wheels on the axle casing on double-thrust bearing and driving them with flanged drive shafts (fully floating).

Rear axles made by Salisbury Transmissions, Ltd., are widely employed for cars, all types of commercial vehicles, industrial vehicles, and so on. A feature of the designs is that the drive gear, pinion and differential are mounted in a rigid central carrier into which the steel axle tubes are pressed and plug-welded. This permits standardization of the main components while the design is easily adaptable to a wide range of wheel tracks and hub arrangements. The hubs are of the semi-floating pattern in the majority of cases, in which the wheel is tapered and keyed to the axle shaft, which runs in a single thrust taper roller bearing inside the axle tube. Sideways location is provided by the opposed thrust bearings, the axle shafts both contacting a central spacer to transfer thrust.

In general the axle load rating governs the type of axle fitting to a particular vehicle, and there are, of course, many different final drive ratios available for each type of axle. As original equipment, the type of axle is chosen after careful consideration of engine torque, tyre size, rear axle load, and so on, therefore an axle should only be replaced with the same type. Similarly, note should be taken that any non-standard feature of a vehicle, such as a different or specially-tuned engine, larger tyre size or increased load-rating may affect the type of axle required. The axle gear ratio is stamped on a tag attached to an assembly by one of the rear cover screws. The axle serial number, which should always be quoted in correspondence, is stamped on the gear carrier housing.

Owing to robust construction and planned lubrication, wear on a Salisbury axle is usually general rather than local, and if an axle requires servicing after a long period of use it should be borne in mind that replacement axles are available through the vehicle manufacturers in most cases. Premature failure is probably due to misuse, faulty servicing or incorrect lubrication. If it is necessary to repair a Salisbury axle *in emergency* certain operations can be performed without the use of special tools. For normal servicing, however, special tools are necessary and these are listed here. Threads and hexagons are in the main U.N.F.

GENERAL DATA

Model	Approx. Weight lb	Oil Capacity Pints	Max. Low Gear Torque lb/in	Max. Wt. on Axle lb
6 HA	70	1¾	16,000	1,400
3 HA	100	2½	21,500	2,000
3 HU	75	2½	21,500	—
4 HA	120	3	26,000	3,000
4 HU	90	3	26,000	—
6 HA	150	3	33,000	4,000

SPECIAL TOOLS

	Tool No.
Universal dial test indicator*	SE.101
Axle shaft extractor†	SE.102
Pinion and diff. bearing cone puller† ...	SE.103
Gear carrier stretching fixture	SE.104
Pinion bearing cup extractor†	SE.105
Bearing cup installation tool†	SE.106
Pinion cone setting gauge†	SE.107
Pinion oil seal installation collar† ...	SE.108

*Cat. No. 160 from J. E. Baty & Co., Ltd., 39, Victoria Street, London, S.W.1.
†Available from V. L. Churchill & Co., Ltd., Great South West Road, Feltham, Middlesex.

CONSTRUCTION

The build-up of the axle tubes and gear carrier have already been described. The pinion is supported and located in the

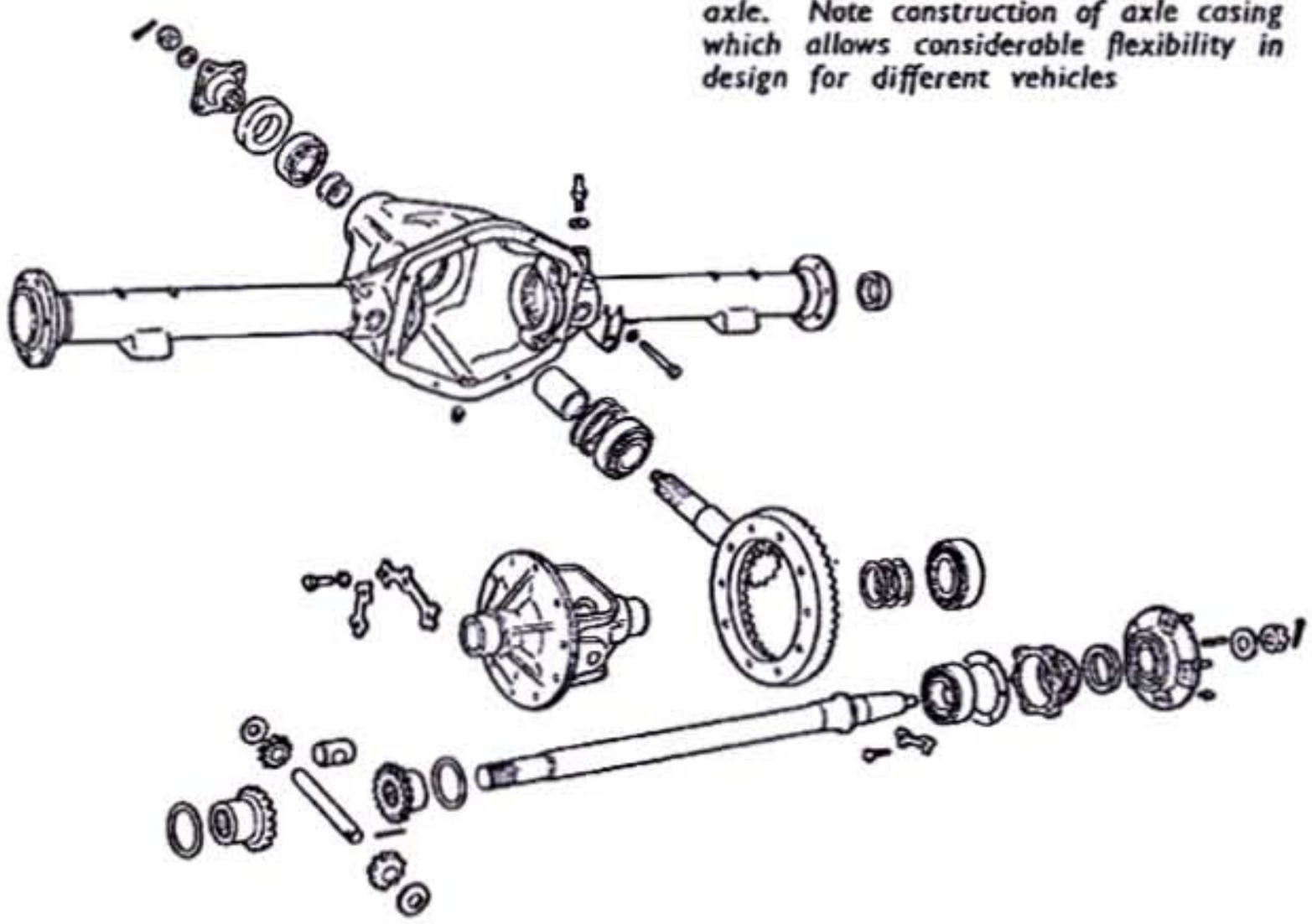

Components of a typical Salisbury rear axle. Note construction of axle casing which allows considerable flexibility in design for different vehicles

gear carrier by opposed thrust taper roller bearings. Shims are fitted between the cup of the inner bearing and the shoulder which locates it in the gear carrier to adjust the depth of mesh of the pinion. On the splined end of the pinion shaft fits the companion flange of dimension to suit Hardy Spicer or Layrub joints, retained by a washer and castellated nut against the cone of the outer bearing. Since the distance between the bearing cups is determined by their location against shoulders in the gear carrier, the preload of the bearings is established by the distance between the cones. This is adjusted by shims between the cone of the outer bearing and a spacer resting on the cone of the inner bearing, or between the cone of the outer bearing and a shoulder on the pinion shaft. A lipped metal dust seal is pressed against a shoulder on the companion flange and a lipped oil seal is pressed into a recess in the gear carrier, an oil slinger fitting between the companion flange and the outer taper roller bearing.

The drive gear and differential unit also run in taper roller bearings in the gear carrier. Semi-circular shouldered recesses are machined in the gear carrier to locate the cups of the bearings, which are retained by bolted-on bearing caps. Shims are fitted between the differential case and the bearing cones, their total dimension determining the preload on the bearings and the apportioning of the total between the two sides the depth of mesh of the drive gear. A flange is machined on the differential case, to which the drive gear is attached by setscrews locked by tabs, and the differential case has two substantial webs bridging the differential gears.

Two bevel-toothed side gears have internally splined hubs which register in recesses in the sides of the differential case, flat thrust washers being fitted between the gears and the case, meshing with the side gears and two (for heavy-duty axles four are fitted) pinion mates (differential pinions) free to rotate on a shaft located in a cross-bore in the differential case and retained by a taper pin. The thrust faces of the pinion mates are spherically formed and spherical thrust washers fit between these faces and the differential case. The axle shafts have splined ends which engage in the side gears, and their ends abut on a spacer surrounding the pinion mate shaft.

At their outer ends the drive shafts are threaded, tapered and keyed (usually) for attachment of the wheel hubs. The cone of a taper roller bearing is pressed up against a shoulder on each axle shaft, the cup being located in a recess in the axle tube. The outer race is retained by a special plate or the brake back plate, which is bolted to a flange on the axle tube along with the hub seal. Shims between the flanges and the back plates govern the exact position of the cups, and thus the axle shaft end float. Another oil seal, lip inwards, fits inside the axle tube bearing on the axle shaft.

Drive units for use with independent or de Dion rear suspension are similarly constructed but have no axle tubes, stub axle shafts being supported by double thrust taper roller bearings direct in the gear carrier.

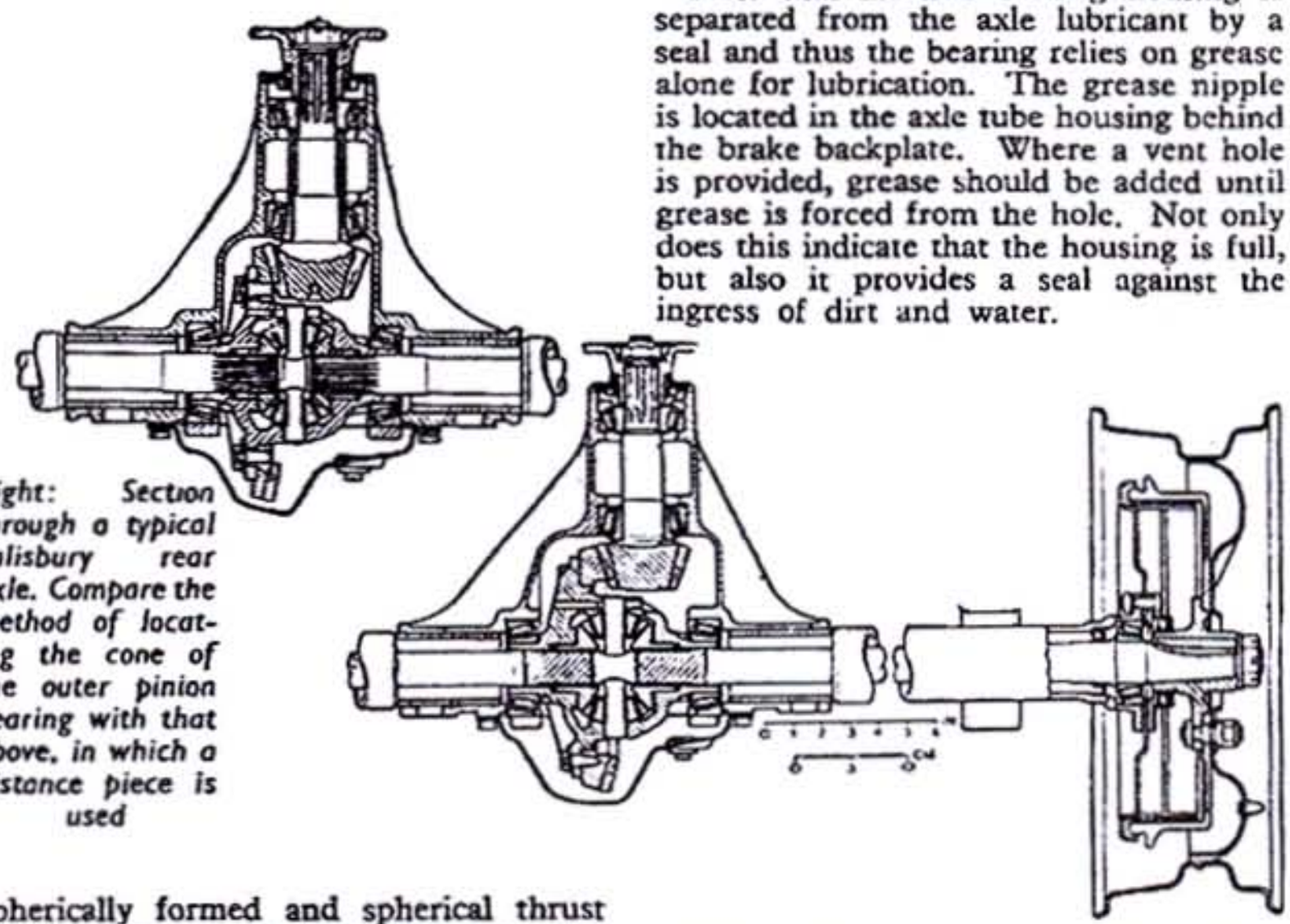

Right: Section through a typical Salisbury rear axle. Compare the method of locating the cone of the outer pinion bearing with that above, in which a distance piece is used

MAINTENANCE

There are no running adjustments, and maintenance is confined to lubrication of the final drive and of the hub bearings.

After first 500 miles. Drain oil and refill. Drain plug is on underside of gear carrier housing and combined filler and level plug is on rear cover. Draining is preferably carried out after vehicle has been run to warm oil thoroughly.

Grease hub bearings.

Every 1,500 miles or monthly. Check oil level in axle and top up if necessary.

Grease hub bearings.

Every 10,000 miles or six months. Drain oil from axle and refill.

Notes. Only oils shown in the table of recommended lubricants should be used, due to the special requirements of hypoid gears. Oils of the approved brands should not be mixed. If there is any doubt as to which lubricant is in the axle, it should be drained, flushed with the new lubricant and then refilled. Use of flushing oil may cause dangerous dilution. **The addition of any proprietary compounds to recommended oils is not approved since this may cause dangerous dilution and gear failure.**

Note that the hub bearing housing is separated from the axle lubricant by a seal and thus the bearing relies on grease alone for lubrication. The grease nipple is located in the axle tube housing behind the brake backplate. Where a vent hole is provided, grease should be added until grease is forced from the hole. Not only does this indicate that the housing is full, but also it provides a seal against the ingress of dirt and water.

REMOVING and REPLACING AXLE SHAFTS

To remove an axle shaft, jack up axle on stands and remove road wheel, brake drum and hub. Withdraw hub with suitable extractor (vehicle manufacturers supply extractor), after removing split pin, castellated nut and washer.

Check end float of axle shaft with dial indicator assembly. Correct tolerance for end float is .006-.008in. Remove brake backplate retaining bolts, bearing retaining plate (if fitted) and brake backplate, taking care not to lose or damage any of the shims. Remove axle shaft complete with taper roller bearing (tool no. SE102).

If the axle shaft has broken, a length will be left protruding from splined side gear. To remove this, make a loop at end of piece of stiff wire, slide loop down axle tube and over broken axle shaft so that when wire is pulled, loop will tighten over shaft and withdraw it from side gear. Examine axle shaft oil

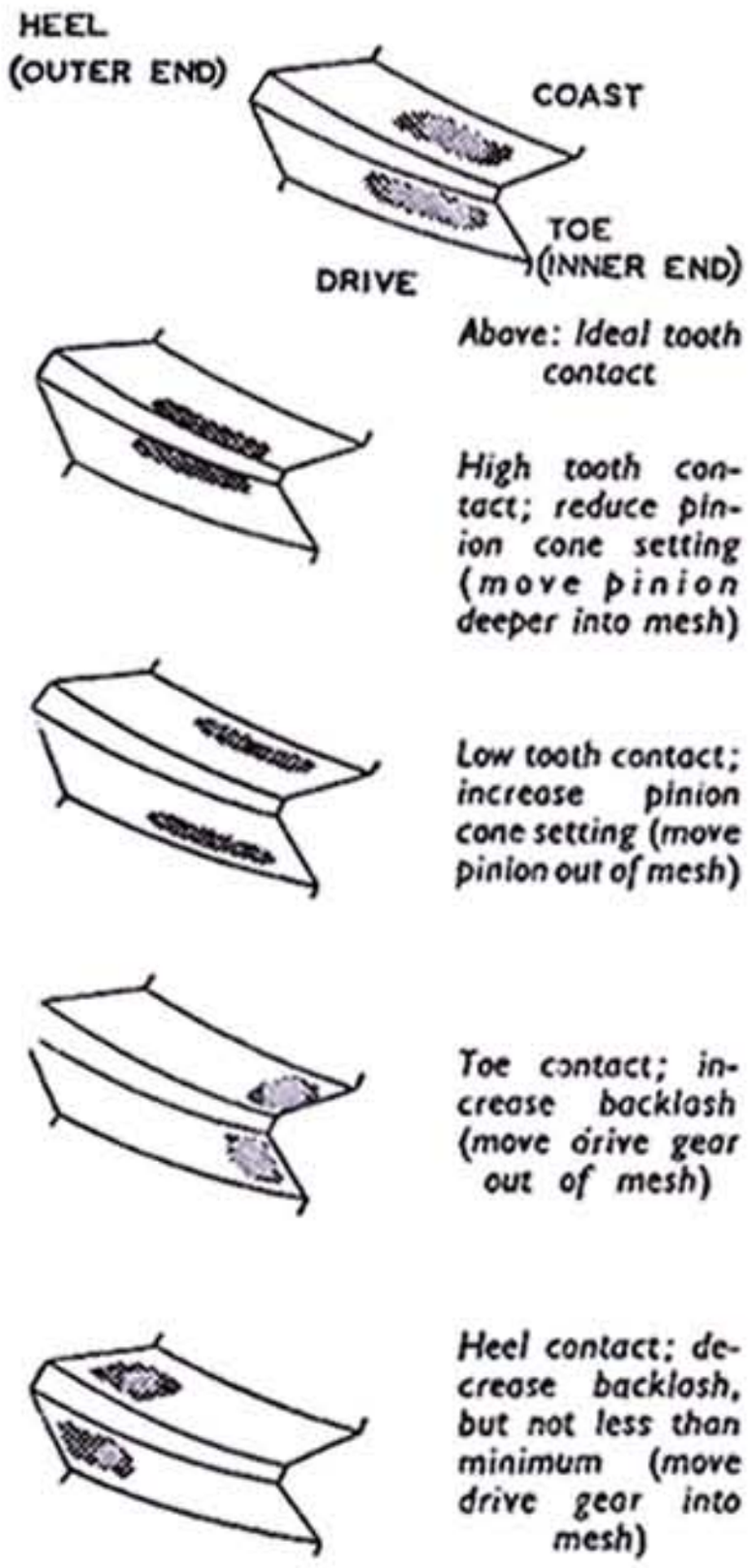

Above: Ideal tooth contact

High tooth contact; reduce pinion cone setting (move pinion deeper into mesh)

Low tooth contact; increase pinion cone setting (move pinion out of mesh)

Toe contact; increase backlash (move drive gear out of mesh)

Heel contact; decrease backlash, but not less than minimum (move drive gear into mesh)

seal and, if necessary, withdraw it and replace with a new seal. Examine the hub bearing and if replacement is necessary withdraw it from shaft with extractor (tool No. SE103).

Fit replacement bearing (if replaced), making sure that cone is pressed squarely on bearing diameter until it firmly abuts against the shoulder. If bearing is not pressed home it will creep in service, resulting in excessive axle shaft end float, which will damage race surfaces due to hammering. Where abutment shoulder is not provided the bearing has a taper bore and should be pressed on with specified steady load of two tons.

To replace axle shaft, wash hub bearings so that axle shaft end float can be determined accurately. Install shaft with taper roller bearing cone, taking care not to damage oil seal. Assemble bearing cup, while ensuring that cup enters housing squarely. Add or subtract adjusting shims (available in thicknesses of .003, .005, .010, and .030in) until correct end float (.006-.008in) is obtained; this is just perceptible with the hand. Adding shims increases end float. Check shims on other side of axle and divide shims to give more or less equal thickness on each side to centralize spacer.

Examine hub seal and replace if necessary. Fit brake backplate and centralize hub oil seal. When refitting, fit new paper gaskets on either side of hub bearing retaining plate, or between brake backplate and oil seal assembly, to prevent grease leaking into drum. Check axle shaft end float with dial indicator assembly, after gently tapping with a rawhide mallet on each axle shaft to ensure that bearing cups are abutting against brake backplates or retaining plates.

Finally, it is essential to grease hub bearings.

DISMANTLING

Owing to the design of the axle, in an extreme emergency work could be carried out with the axle *in situ*. However, this is not advisable and for any dismantling beyond removal and replacement of axle shafts, axle should be removed from vehicle as specified by manufacturer. Exterior of axle should be cleaned thoroughly. All dismantling and assembling should be carried out under clean conditions as dirt in the axle can cause failure of gears or bearings.

Drain lubricant from gear carrier housing and remove rear cover. Flush out unit thoroughly so that parts can be inspected carefully. Remove axle shafts as already detailed. Withdraw four bolts securing two differential bearing caps and remove caps.

Before removing differential assembly fit stretching fixture (tool No. SE104). Adjust fixture to suit axle being serviced; holes are provided for adjustment of side pieces in member opposite turnbuckle. Adjust turnbuckle until dowels on side pieces drop into locating holes on either side of gear case, then expand turnbuckle until it is hand tight. With a spanner, give only a half-turn to the turnbuckle. *If this is exceeded, axle casting may be damaged beyond repair.* Differential assembly may now be prised out with two levers, one on each side of case opening, using protective packing between levers and gear carrier.

In emergency the differential assembly may be prised out without the use of the fixture to spread the casing; but care must be taken not to tilt the assembly, which will wedge it even more tightly.

To strip differential assembly, bend down tabs of locking straps on drive gear setscrews and remove setscrews. Remove drive gear from differential case by tapping with rawhide mallet. Using a small drift, drive out pinion mate shaft locking pin, which is secured by peening the case and is tapered so that it can only be driven out from the drive gear flange side. Push out shaft. Remove axle shaft spacer. Rotate side gears by hand until pinions are opposite openings in differential case, then remove differential gears, care being taken to retain the thrust washers. If drive gear setting is to be altered it is necessary to withdraw differential bearing cones with extractor (tool No. SE103) to gain access to shims.

To remove pinion, remove split pin, nut and washer and withdraw companion flange with a puller. Press pinion out of outer bearing. *Do not drive out as bearing may be damaged.* Pinion may now be removed from gear carrier housing. Retain all shims. Remove pinion seal together with oil slinger and outer bearing cone. Examine outer bearing for wear and, if replacement is required, extract bearing cup (tool No. SE105). Insert plate behind cup and fit drawbar with extractor bar which seats on nose of gear carrier. Tightening nut withdraws bearing cup.

If correct service tool is not available and old bearing cup is to be scrapped, it is possible to drive out cup, the locating shoulder being recessed to allow for this.

Remove pinion inner bearing cup (tool No. SE105) with extractor bar on differential cover facing, if bearing requires replacement or pinion is to be reset. Retain all shims.

If inner bearing is to be replaced, cup may be driven out, but correct service tool should be used when bearing is removed in order to carry out pinion setting adjustment.

SETTINGS AND ADJUSTMENT

Before settings can be adjusted, differential assembly must be reassembled. Replace side gears and thrust washers in position. Insert differential pinions through openings in differential case, and mesh them with side gears. Hold thrust washers on spherical thrust faces of pinion mates while rotating differential gear assembly into position by hand, line up pinions and thrust washers and install pinion mate shaft *with axle spacer in position.*

Line up cross hole in shaft with hole in differential case, then fit pinion mate shaft locking pin from side opposite drive gear mounting flange. Using a punch, peen some metal from case over end of lock pin to retain it. Clean drive gear and locating surfaces on differential case, examining for burrs. Align drive gear setscrew holes with those in flange on case and gently tap drive gear home on

AXLE SERVICE DATA

	6 HA	HA †	3 HA	4 HA	2 HA†	5 HA
Pinion drop (A) in	1.000	1.250	1.375	1.500	1.750	1.750
Zero cone setting (B) in	2.000	2.125	2.250	2.625	2.750	2.968
Mounting distance (C) in	3.375	3.625	3.937	4.312	4.625	4.905
C/L to Brg. Housing (D) in ...	4.193	4.848	5.130	5.505	5.818	6.131
	4.183	4.838	5.120	5.495	5.808	6.121
Drive gear setscrew tightening ...	40-50	40-50	¾ 50-60	¾ 50-60	40-50	70-80
Torque (lb/ft)			⅞ 70-80	⅞ 70-80		

Axle shaft end float	.006-.008" in all.
Diff. preload shim allowance ...	.005 in all.
Backlash	As etched on drive gear (min. .004in)
Pinion bearing preload	8-12 lb/in

* .003-.005 in when disc brakes are fitted.
† Models HA and 2 HA are no longer in production.

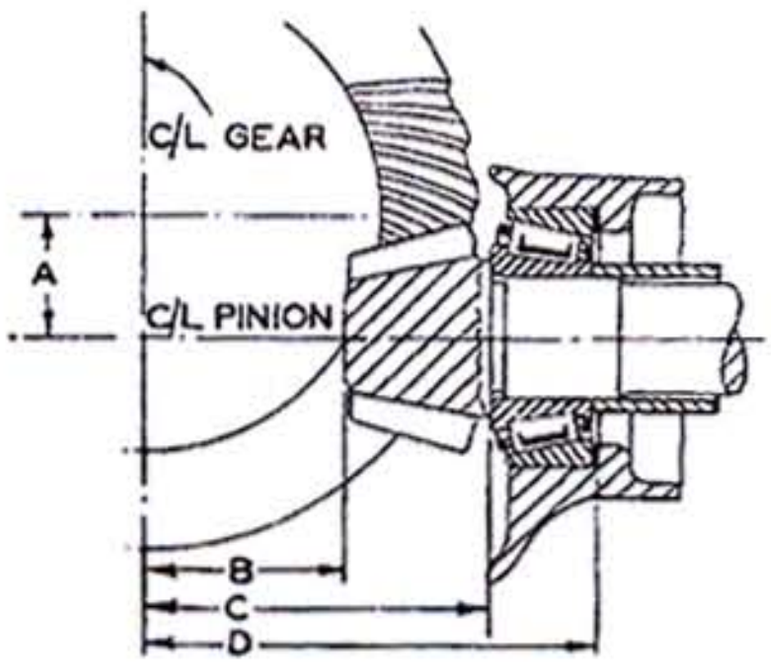

Diagram showing how distances referred to in table alongside are measured

case with hide or lead hammer. Insert drive gear setscrews with *new* locking straps and tighten uniformly, preferably with torque spanner to correct torque (see table). Finally bend locking tabs firmly around setscrew hexagons.

Differential Bearings. To find thickness of shims required, fit differential bearings, without shims, to differential case, making sure that bearing cones, cups and housings are perfectly clean. Place differential assembly, with cups in housings, pinion not being installed. Fit dial indicator test set on gear carrier with button against back face of drive gear. Insert two levers between bearing cup and housing and move differential assembly to one side of gear carrier. Set dial indicator to zero. Move assembly in same way to other side and record indicator reading, which is total clearance between bearings as assembled and abutment faces in gear carrier.

Add .008in more to clearance to give preload, and this gives the total thickness of shims to be used in final installation; however, shims are divided between sides to give correct backlash and mesh.

Pinion Bearings. Remove differential assembly from gear carrier, re-install pinion bearing inner cup with original shims in position. Press inner bearing cone on to pinion using arbor press and length of tube of diameter to bear on inner race and *not* roller retainer.

Before any further assembly is attempted pinion should be correctly adjusted. Correct pinion setting is marked on ground end of pinion. At top of four markings is the serial number, also marked on drive gear as drive gear and pinion are lapped together in production and must be kept as matched sets. Left-hand letter is purely a factory reference, but right-hand letter and figure refer to tolerance on pinion offset, actual dimension being stamped on cover facing of gear carrier. Offset should be quoted in ordering spares (L.1 carrier requires L.1 gears, and so on). Number at bottom gives cone setting distance for pinion, and may be 0, + or —. This figure indicates variation in "thous" from standard cone setting (see table).

When pinion bearing cups have been installed in gear carrier with original inner bearing adjustment shims, place pinion, with inner bearing cone assembled, in gear carrier. Turn carrier over and support pinion in block of wood. Install bearing spacer (if fitted), and original outer bearing shims on spacer or shoulder on shank. Fit pinion outer bearing cone, companion flange, washer and nut only, omitting oil slinger and oil seal assembly; tighten nut.

Check pinion cone setting distance with gauge (tool No. SE107). Adjust bracket carrying dial indicator to suit model being serviced, and set dial indicator to zero with the setting block. Place dial indicator assembly on fixed spindle of gauge body. Fit fixed spindle of gauge body into centre of pinion head, slide movable spindle into position, locating in centre of pinion shank with gauge body underneath gear carrier, and lock spindle with screw provided. Check pinion cone setting by taking a dial indicator reading on differential bore with bracket assembly seated on ground face on end of pinion. Correct reading will be minimum obtained, i.e. in centre of half-bore. Slight movement of indicator will show minimum position. Dial indicator now shows deviation of pinion setting from zero cone setting, and it is important to note whether this is a + or — reading.

If this figure differs from that marked on pinion, dismantle pinion assembly, remove inner bearing cup (tool No. SE 105), add or remove shims (.003, .005 and .010in thick) to give correct setting and re-install pinion. Check reading, as before.

When pinion setting is correct, check pinion bearing preload, which should give slight drag, or resistance to turning, without end play (see table). Too little preload allows excessive deflection under load, too much will lead to bearing failure. To adjust preload alter shims between outer cone and spacer or pinion shank; *do not touch shims behind inner bearing cup.*

Adjusting Drive Gear. Place differential assembly with bearing cups and less shims in housing ensuring that all parts are clean. Install dial indicator on housing with button on back face of drive gear. With two small levers between housing and bearing cup, move differential case and drive gear assembly away from pinion until opposite bearing cup is seated against housing. Zero dial indicator, then move differential assembly towards pinion until drive gear is in hard mesh (metal to metal) with pinion. Indicator reading (clearance between drive gear and pinion without bearing shims) minus backlash allowance etched on drive gear (e.g., B/L. .007) denotes thickness of shims to be placed between differential case and bearing cone on drive side of differential. From shims already prepared to give correct bearing adjustment, select those necessary to give correct drive side setting, and place remainder on other side.

Fit stretching fixture to gear carrier as for dismantling and lower differential assembly into position, lightly tapping bearings home with hide hammer, ensuring that gear teeth are meshing with pinion. Careless handling may cause bruising of gear teeth. When refitting bearing caps be sure that numerals on caps and cover facing correspond (horizontal with horizontal and vertical with vertical). Tighten caps lightly, remove stretching fixture and tighten setscrews, with spring washers, retaining caps.

In emerging it is possible to install differential assembly by slightly tilting bearing cups and tapping home lightly with hide hammer. This method increases difficulty of avoiding damage to gear teeth and to differential bearings, and so it is not recommended.

Mount dial indicator on gear carrier with button against back face of drive gear. Rotate pinion by hand and check run-out of drive gear, which should not exceed .005in. If this is exceeded it is probably due to burrs or dirt on surfaces locating drive gear, so unit must be dismantled and cleaned.

Mount dial indicator on gear carrier housing with button against drive gear teeth as nearly tangential as possible. Move drive gear by hand to check backlash, which should be as etched on drive gear. If incorrect alter shims from side to side of differential case to give correct figure.

After adjusting backlash, paint eight or ten drive gear teeth with stiff mixture of marking raddle or engineer's blue. Move painted teeth in mesh with pinion until good impression of tooth contact is made. (See illustrations.)

FINAL ASSEMBLY

Remove drive pinion nut, washer and companion flange, install oil slinger, then fit pinion oil seal assembly (tool No. SE108). Place oil seal with dust excluder flange uppermost (also oil seal gasket used with metal case type of seal on later models), fit installation collar SE108 and tighten down pinion nut and washer to drive assembly home. Remove installation collar.

Fit companion flange with dust excluder, washer and pinion nut, tighten and secure with split pin. Fit rear cover gasket, renewed if necessary, and rear cover, securing with setscrews and lock washers, not omitting ratio tag on one setscrew. Replace axle shafts and hub-bearings as described. Check that drain plug is securely tightened, then fill with correct quantity of approved lubricant. Replace filler plug and check that cover setscrews are tight. Check for oil leaks at cover, pinion oil seal and where differential cap bolts break through carrier. Finally, grease hub bearings.

RECOMMENDED LUBRICANTS

AXLE

This list gives oils for use under normal conditions, in temperate climates. For extreme operating conditions, refer to the vehicle manufacturer who will advise any special recommendation approved for such applications.

SUPPLIER	LUBRICANT
H. G. Allcard & Co., Ltd.	Hypoid Gear Oil SAE.90
Esso Petroleum Co., Ltd.	Esso Expee Compound 90
Edward Joy & Sons Ltd.	Hypoid "Filtrate" Gear Oil SAE.90
Gulf Oil (Gt. Britain) Ltd.	Silvertown Hypoid 90
Mobil Oil, Co., Ltd. ...	Mobilube GX.90
Oiline Refining Co., Ltd.	"Oiline" H.A. Compound Hypoid Gear Lub. 90
B.P.	Energol E.P. S.A.E.90
Ragosine Oil, Co., Ltd. ...	Ragosine Nimrod Hyp. (S.E.A.90)
Redline-Glico, Ltd. ...	Redline Super Hypoid 90 Oil
Regent Oil Co., Ltd. ...	Caltex Hypoid Thuban 90
Shell-Mex & B.P., Ltd.	Shell Spirax 90 E.P.
Snowdon Sons & Co., Ltd.	Royal Snowdrift Gear Oil H.G. 90
Vigzol Oil Co., Ltd. ...	Vigzol Vitapoid 90
C. C. Wakefield & Co., Ltd.	Castrol Hypoy

Use only the grades of oil listed above.

HUBS

SUPPLIER	GREASE
British Oil & Turpentine Corp., Ltd.	Speedwell L.R. Grease
A. Duckham & Co. Ltd.,	Duckhams H.B.B. Grease
Esso Petroleum Co., Ltd.	Esso High Temp. Grease*
" " " "	Esso Grease
Forward Oil Co., Ltd. ...	Forward Pure Oil Grease
Hill & Jackson Ltd. ...	A.H.82 Grease
Maxima Lubricants Ltd. ...	Maxima R.B. Grease
Mobil Oil Co., Ltd. ...	Mobilgrease No. 5*
" " " " ...	Mobilgrease B.B.
Oiline Refining Co., Ltd. ...	Oiline J.A.F. Grease
B.P.	Energrease N.3*
B.P.	" C.3
Regent Oil Co., Ltd. ...	Caltex Star Grease 3
Shell Mex & B.P. Ltd. ...	Retinax A*
" " " " " ...	Retinax A or Retinax R.B.
Solvolene Lubricants Ltd.	Solvolene R.B. Grease
C. C. Wakefield & Co., Ltd.	Castrolease W.B.*

*NOTE: For rear hub bearings Jaguar Cars, Ltd. recommend these greases, of higher melting point, for the special conditions under which axles operate in these cars. In this case the higher greases should not be used.