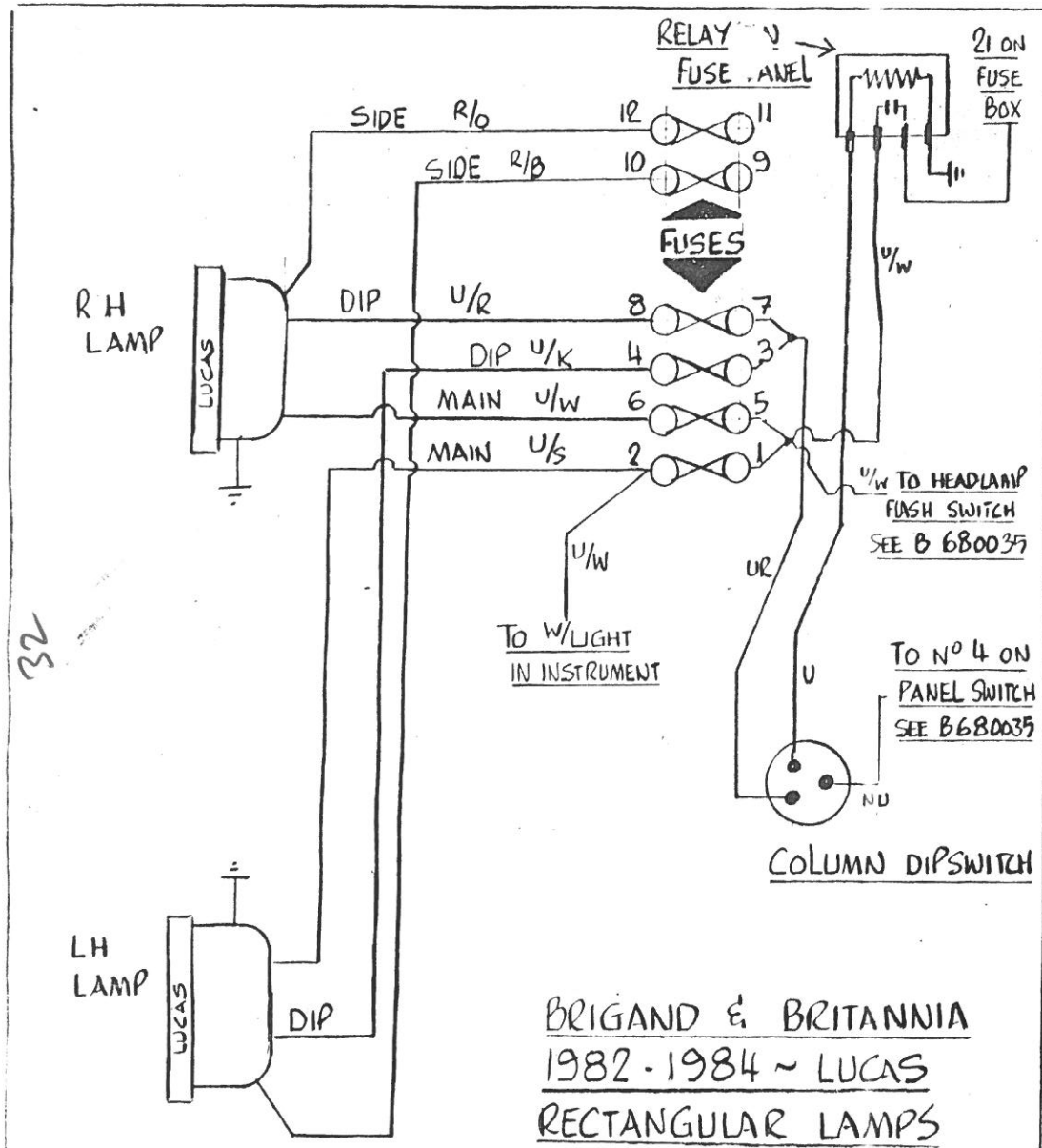

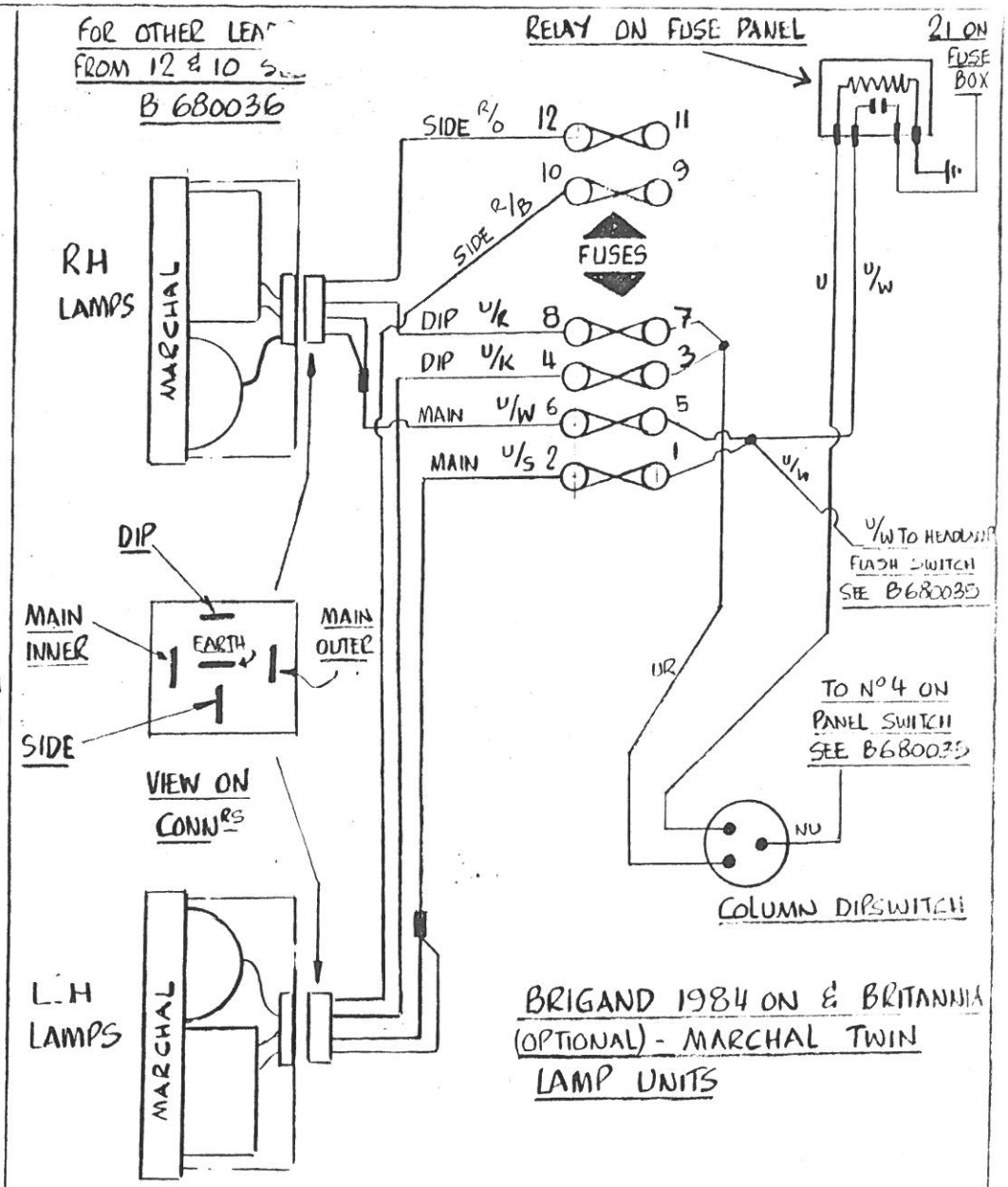

BRISTOL CARS FILTON BRISTOL ENGLAND	HEADLAMPS ~ WIRING ~	'BRIGAND' & 'BRITANNIA'	SEPT/84	B 680281

FUSE B. IGN. CONTROL

SEE B 680045

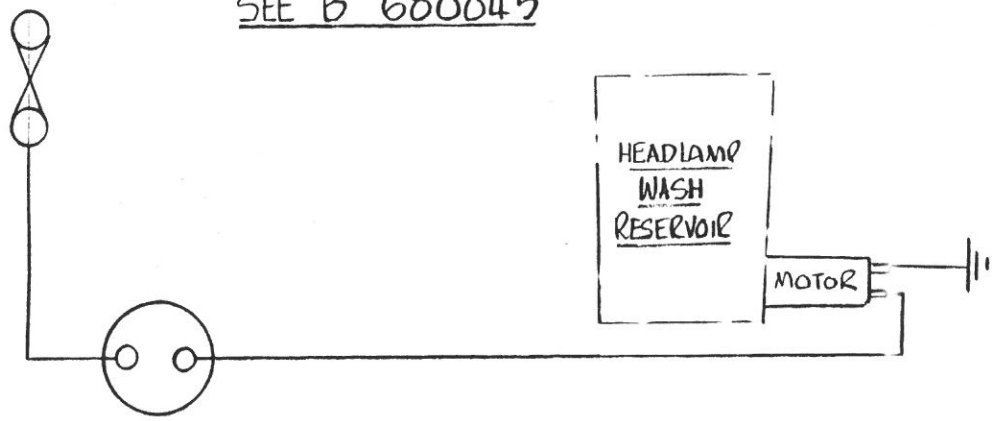

22

BRISTOL CARS. FILTON. BRISTOL	HEADLAMP WASH	'BRIGAND' & 'BRITANNIA'	OCT 184	B 680282

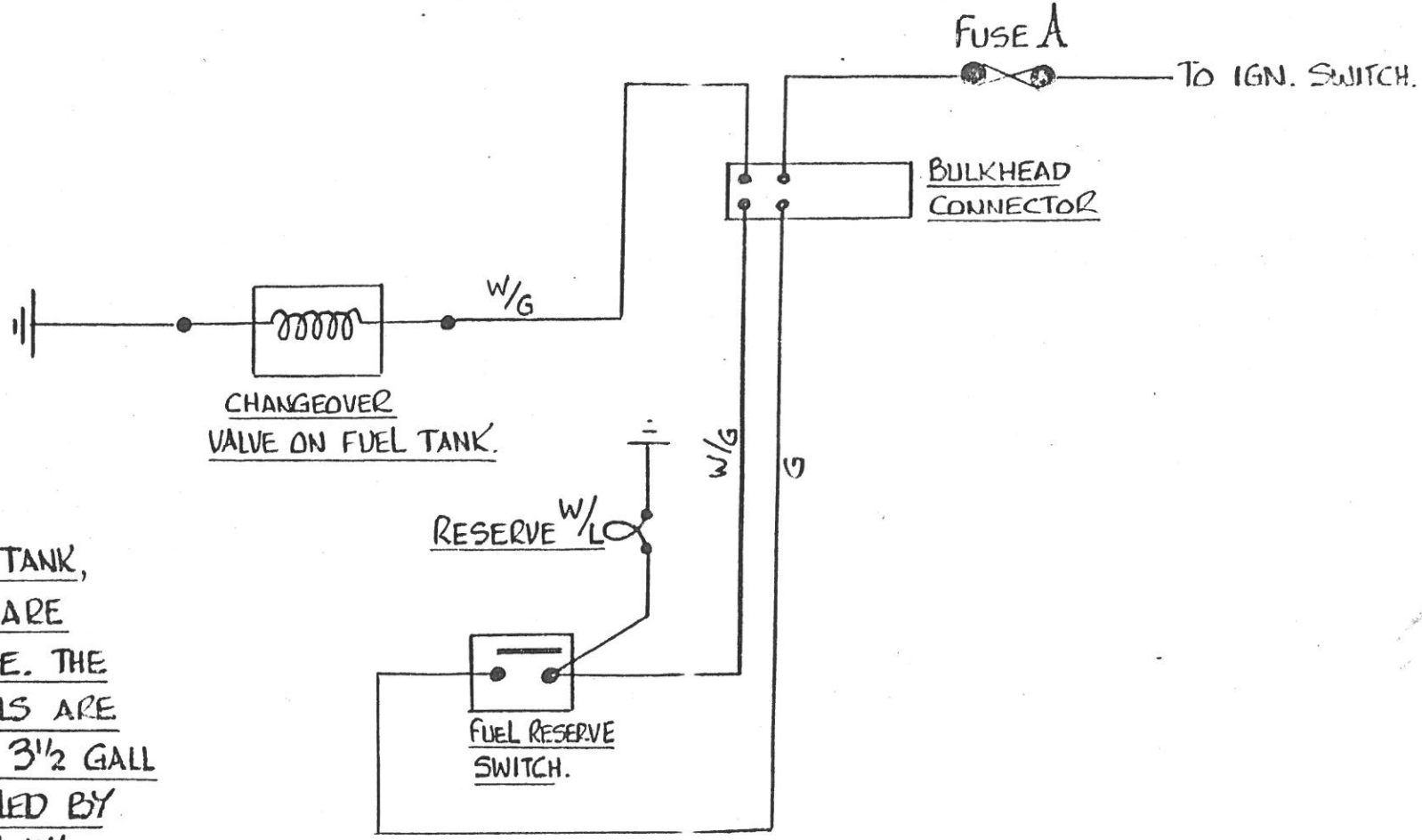

WITH THE 27½ GALL TANK, THE FIRST 18 GALLS ARE RECORDED BY GAUGE. THE REMAINING 9½ GALLS ARE NOT RECORDED BUT 3½ GALL (STATIC) ARE CONTROLLED BY "RESERVE" SWITCH & W/LIGHT.

CHASSIS Nos
7964192
8509038
8529098

BRISTOL CARS FILTON BRISTOL ENGLAND	SPECIAL FUEL RESERVE INSTN	BRIGAND & BRITANNIA CARS WITH SPECIAL 27½ IMP. GALLON FUEL TANK.	MAY 85	B 680286

BASIC SYSTEM.

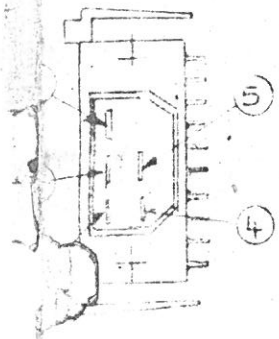

EW ON END
'DIM DIP'
OLTAGE TRANSFORMER
HOWING TERMINAL
EAD IDENTIFICATION.

NNECTIONS FROM :—

1) IGNITION SUPPLY
2) DIP-SWITCH LOW BEAM OUTLET
3) SUPPLY TO H/LAMP SWITCH
4) DIP-SWITCH HIGH BEAM OUTLET
5) HEAD & SIDE LAMP SWITCH SUPPLY TO SIDE LIGHTS.

B 680293

VOLTAGE TRANSFORMER (DIAGRAMMATIC)

1 2 3 4 5

ENGINE UALANCE

DASH PANEL

BATTERY FEED

SIDE LIGHT SUPPLY.

1 4
2 3

HIGH BEAM.

LOW BEAM

STEERING COLUMN

IGUITION SWITCH

SUPPLY

START

IGN. 'ON'

BRISTOL CARS.
BRISTOL ENGLAND

'DIM-DIP' HEADLAMP CIRCUIT

'BRIGAND' &
'[illegible]IA'

15 MAR.

B 680292

To use 'SPW' 2 speed switch with OEM 603 motor

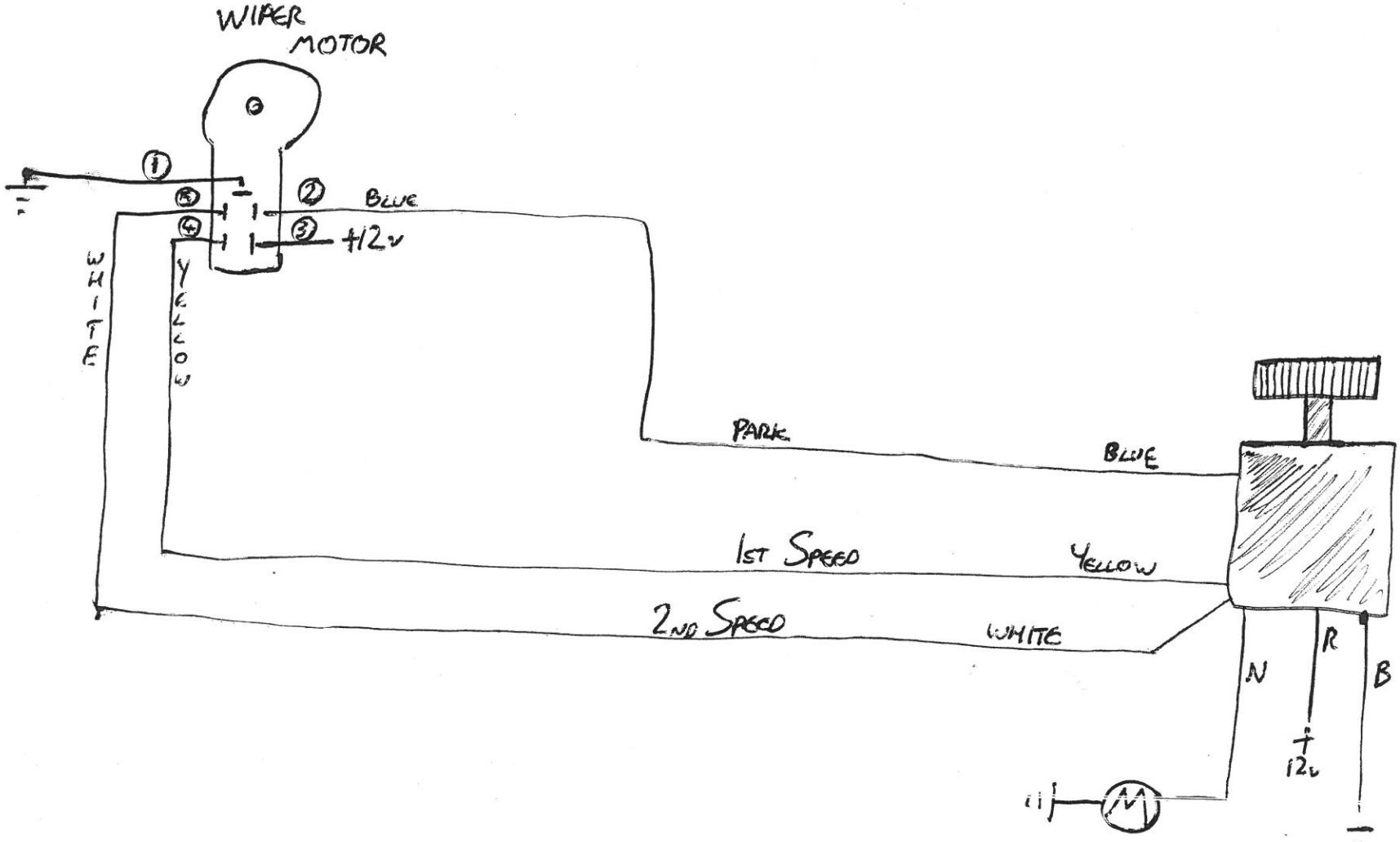

BRISTOL CARS
FILTON,
BRISTOL.

ISSUE No.	MODIFICATION	DATE
A		
1		26/10/71

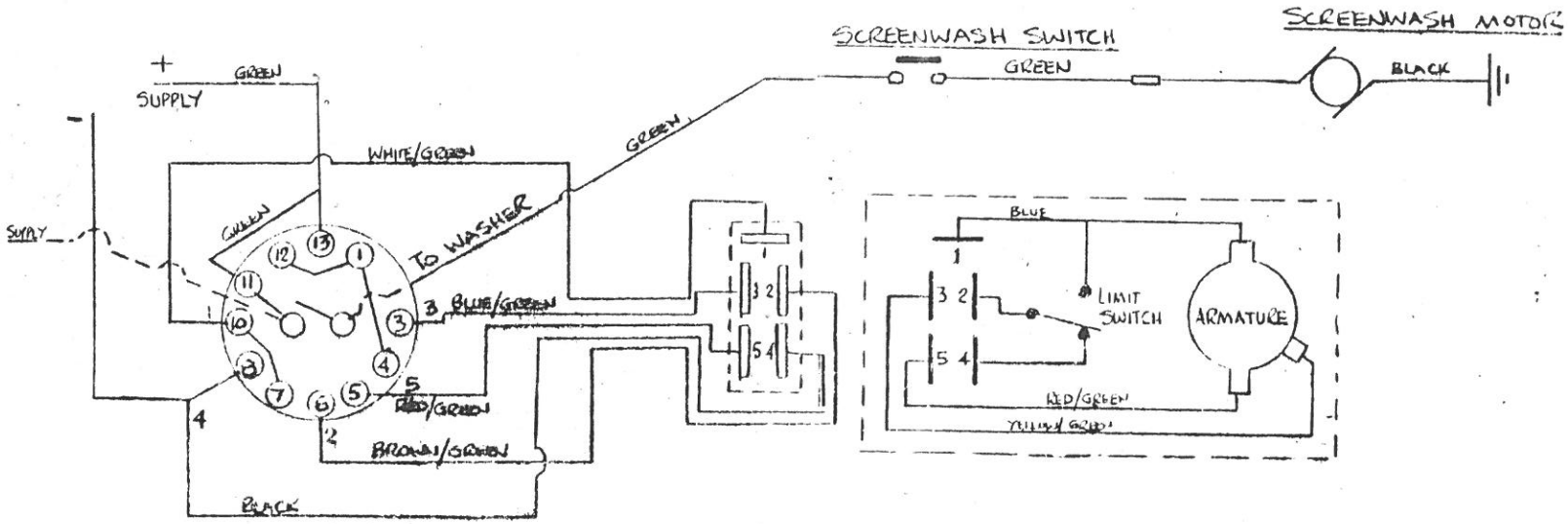

50 SA SWITCH KEY

OFF – (1 → 2) (5 → 6) (10 → 11)
NORMAL – (13 → 1) (4 → 5) (8 → 10)
HIGH – (12 → 13) (3 → 4) (7 → 8)
WASHER – PRESS BUTTON

FOR CARS WITH INTERMITTENT WIPE FACILITY
SEE 412-D-68160 (SPECIAL ORDER)

MATERIAL	TITLE WIRING DIAGRAM – 2 SPEED, SELF PARKING PERMANENT MAGNET SCREEN WIPER MOTOR WITH REGENERATIVE BRAKING 50 SA SWITCH & WASHER	DRAWN	FEB 71		USED ON MODELS	ASSY. DRG. Nº	PART Nº
SPECIFICATION		CHECKED			411		SKN 6074
		TRACED			412		

BRISTOL CARS
HILTON,
BRISTOL

ISSUE No.	MODIFICATION	DATE
1		DEC '75
2	26 RA NOTE ADDED	NOV '78

GENERAL NOTE :— (411 MODELS)
'KENLOWE' MOTORS &
10" 6-BLADE FANS UP
TO CHASSIS 7679323
'LUCAS' MOTORS & 11"
4-BLADE FANS CHASSIS
7680326 ON

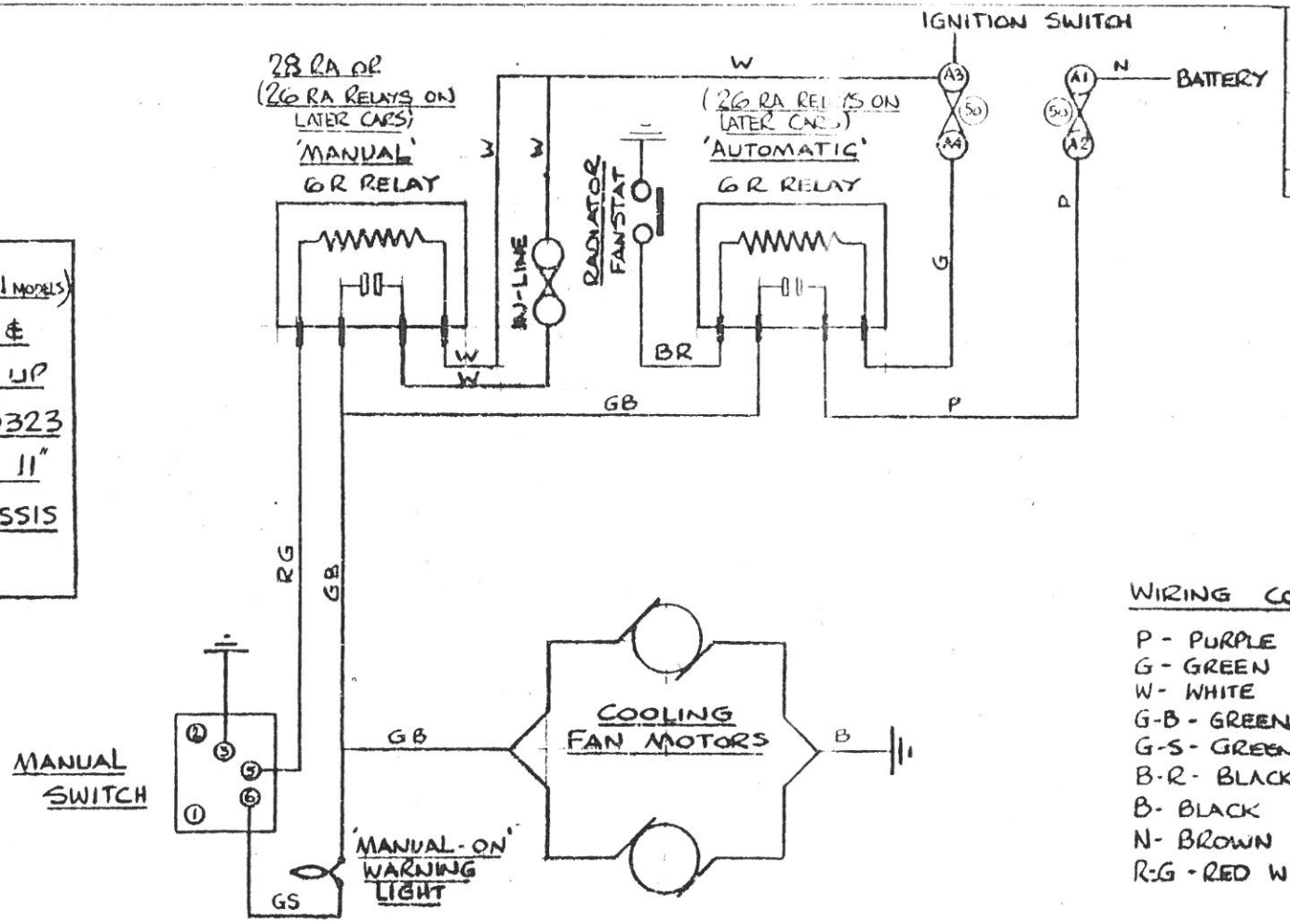

WIRING COLOUR CODE

P - PURPLE
G - GREEN
W - WHITE
G-B - GREEN WITH BLACK TRACER
G-S - GREEN WITH SLATE TRACER
B-R - BLACK WITH RED TRACER
B - BLACK
N - BROWN
R-G - RED WITH GREEN TRACER

MATERIAL	TITLE	DRAWN	NOV '78	USED ON MODELS	ASSY. DRG. No	PART No
	COOLING FAN CIRCUIT	CHECKED		411, 412 & 412 S2		SKN 6163
		TRACED				

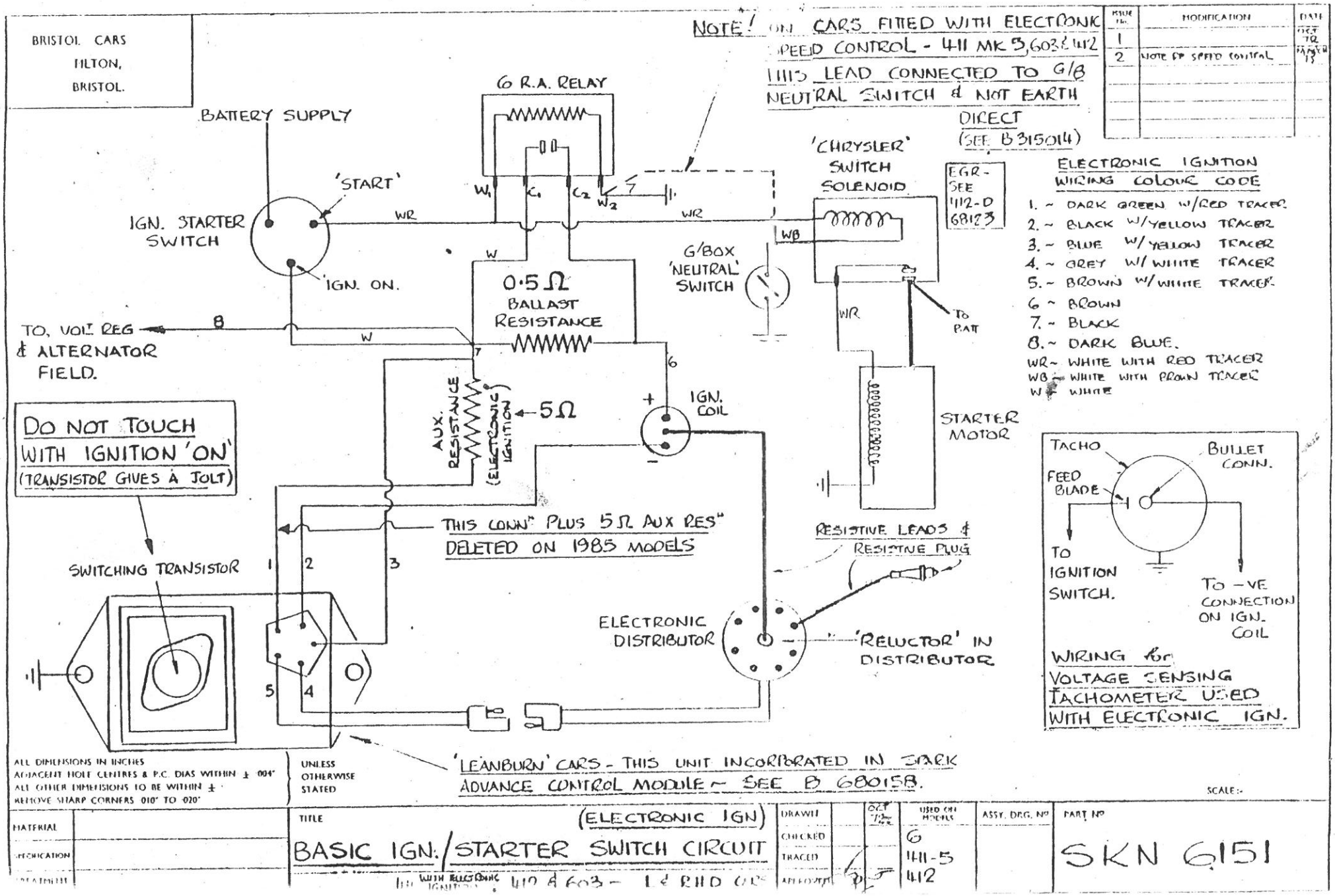
BRISTOL CARS
FILTON,
BRISTOL.
NOTE! ON CARS FITTED WITH ELECTRONIC SPEED CONTROL - 411 MK 5, 603 & 412 THIS LEAD CONNECTED TO G/B NEUTRAL SWITCH & NOT EARTH DIRECT (SEE B 315014)
ISSUE No. | MODIFICATION | DATE
1 | | OCT 72
2 | NOTE RE SPEED CONTROL | MARCH 73
6 R.A. RELAY
BATTERY SUPPLY
'START'
IGN. STARTER SWITCH
'IGN. ON.
WR
W
W1
C1
C2
W2
'CHRYSLER' SWITCH SOLENOID
WB
EGR - SEE 412-D 68123
G/BOX 'NEUTRAL' SWITCH
0·5 Ω BALLAST RESISTANCE
TO, VOLT REG & ALTERNATOR FIELD.
8
7
6
AUX. RESISTANCE (ELECTRONIC IGNITION)
5 Ω
IGN. COIL
+
-
TO BATT
STARTER MOTOR
ELECTRONIC IGNITION WIRING COLOUR CODE
1. ~ DARK GREEN W/RED TRACER
2. ~ BLACK W/YELLOW TRACER
3. ~ BLUE W/YELLOW TRACER
4. ~ GREY W/WHITE TRACER
5. ~ BROWN W/WHITE TRACER
6 ~ BROWN
7. ~ BLACK
8. ~ DARK BLUE.
WR ~ WHITE WITH RED TRACER
WB ~ WHITE WITH BROWN TRACER
W ~ WHITE
DO NOT TOUCH WITH IGNITION 'ON' (TRANSISTOR GIVES A JOLT)
THIS CONN^N PLUS 5 Ω AUX RES^N DELETED ON 1985 MODELS
SWITCHING TRANSISTOR
1
2
3
4
5
RESISTIVE LEADS & RESISTIVE PLUG
ELECTRONIC DISTRIBUTOR
'RELUCTOR' IN DISTRIBUTOR
TACHO
BULLET CONN.
FEED BLADE
TO IGNITION SWITCH.
TO -VE CONNECTION ON IGN. COIL
WIRING for VOLTAGE SENSING TACHOMETER USED WITH ELECTRONIC IGN.
'LEANBURN' CARS - THIS UNIT INCORPORATED IN SPARK ADVANCE CONTROL MODULE ~ SEE B 680158.
ALL DIMENSIONS IN INCHES
ADJACENT HOLE CENTRES & P.C. DIAS WITHIN ± ·004"
ALL OTHER DIMENSIONS TO BE WITHIN ±
REMOVE SHARP CORNERS ·010" TO ·020"
UNLESS OTHERWISE STATED
SCALE:-
MATERIAL
SPECIFICATION
TREATMENT
TITLE
(ELECTRONIC IGN)
BASIC IGN./STARTER SWITCH CIRCUIT
WITH ELECTRONIC IGNITION 412 & 603 - L & RHD CARS
DRAWN
CHECKED
TRACED
APPROVED
OCT 72
USED ON MODELS
6
411-5
412
ASSY. DRG. No
PART No
SKN 6151

BRISTOL CARS
FILTON,
BRISTOL.

ISSUE No.	MODIFICATION	DATE
1		

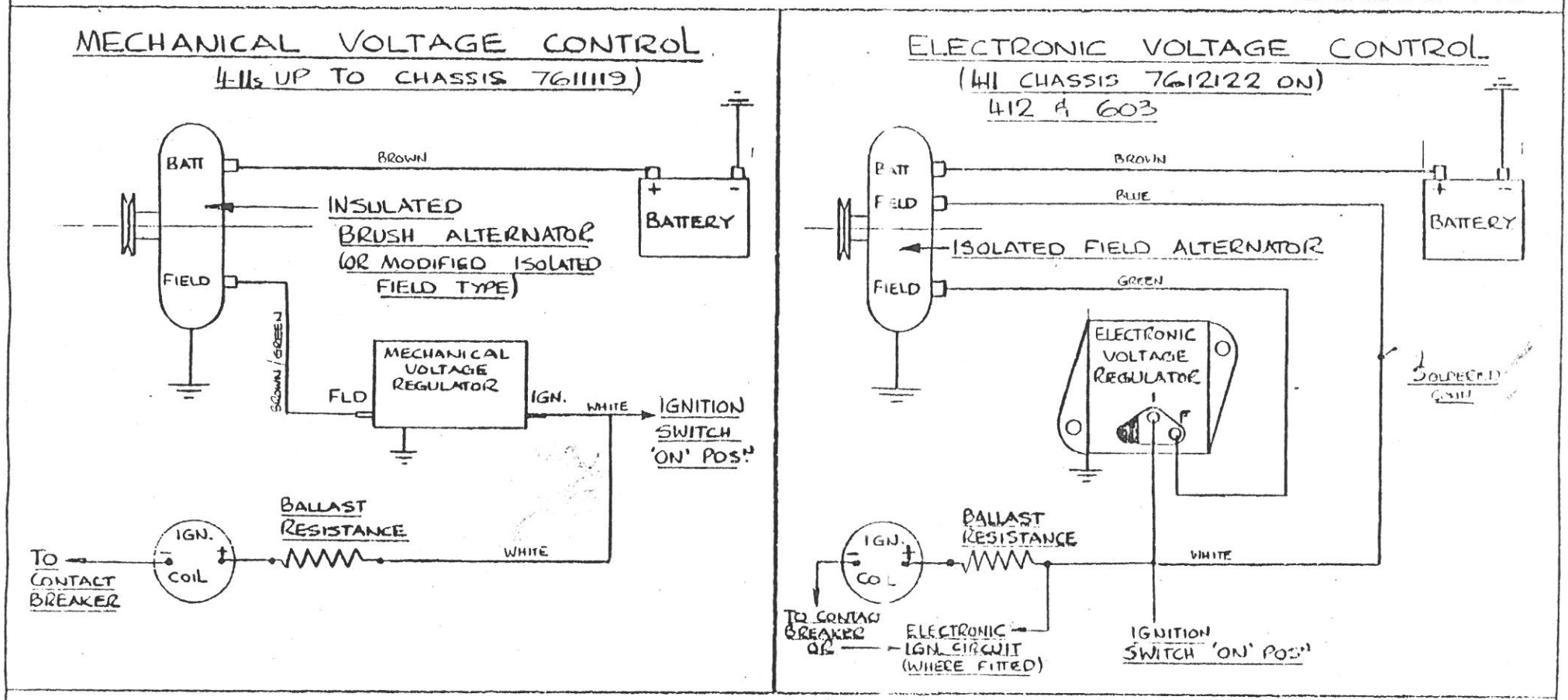

ALL DIMENSIONS IN INCHES
ADJACENT HOLE CENTRES & P.C. DIAS WITHIN ± .004"
ALL OTHER DIMENSIONS TO BE WITHIN ±
REMOVE SHARP CORNERS .010" TO .020"

UNLESS OTHERWISE STATED

SCALE:

MATERIAL		TITLE	DRAWN	NOV -72	USED ON MODELS	ASSY. DRG. No.	PART No.
SPECIFICATION		ALTERNATOR - V.C. CIRCUITS	CHECKED		6		SKN 6164.
TREATMENT OR FINISH		411, 603 & 412 CARS R & LHD	TRACED		411		
			APPROVED		412 & 41252/3		

40

BRISTOL CARS
FILTON.
BRISTOL.

COLOUR CODE & SYMBOLS ~

B - BLACK	G-N - GREEN-BROWN	LGN - LIGHT GREEN-BROWN
N - BROWN	G-P - GREEN-PURPLE	TERMINAL BLOCK
G - GREEN	P-W - PURPLE-WHITE	SNAP CONNECTOR
P - PURPLE	G-W - GREEN-WHITE	PLUG & SOCKET
GR - GREEN-RED	LGP - LIGHT GREEN-PURPLE	

'EARTH' VIA CABLE

'EARTH' VIA CASING OR BOLTS.

ISSUE No.	MODIFICATION	DATE
2	FLASHER UNIT & LIGHT CORRECTED TO LATEST TD	25/2/71
3	FLASHER W/L AMENDED	DEC 72
4	NEW HAZARD SWITCH & UNIT	JULY 73

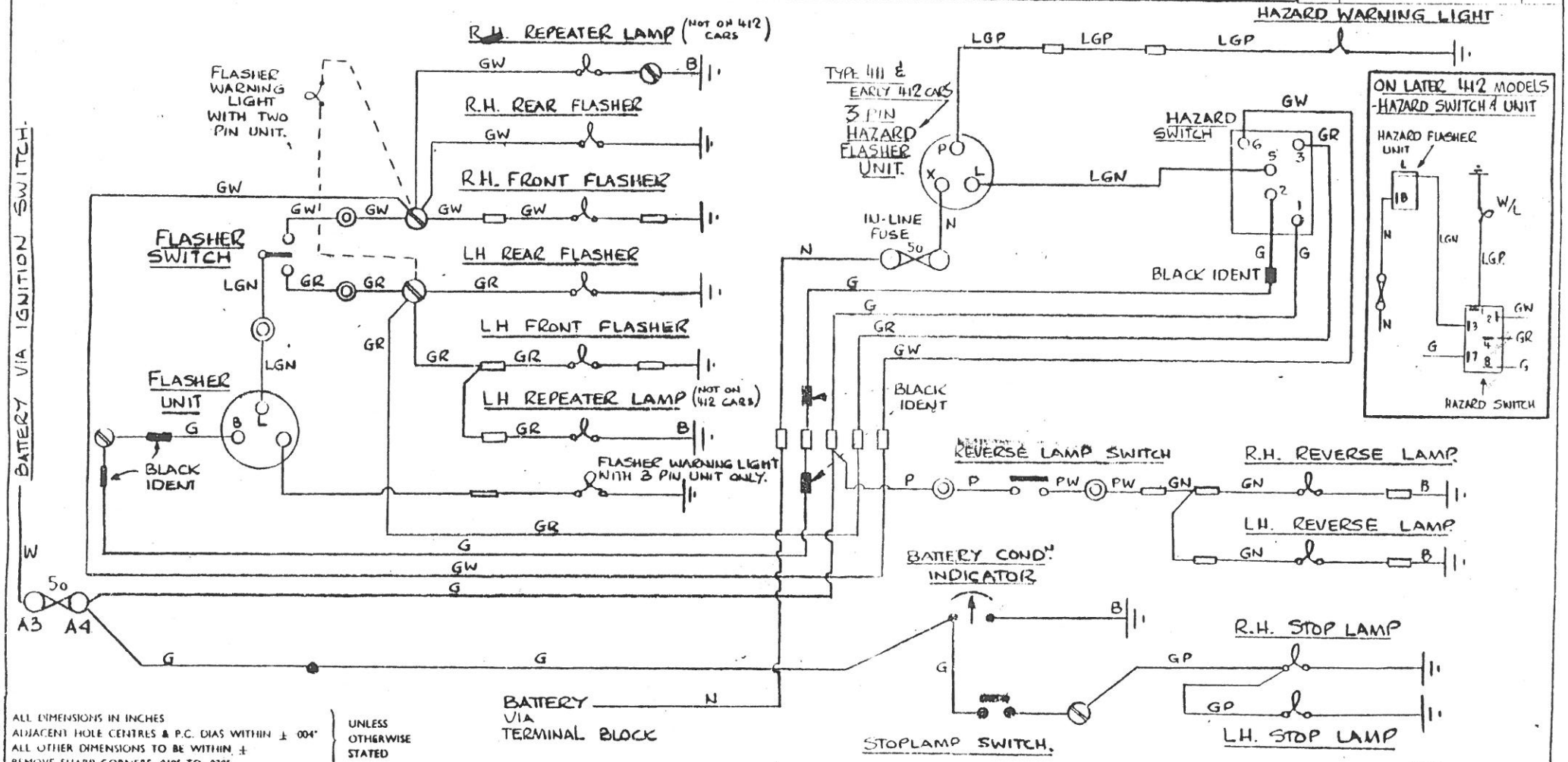

ALL DIMENSIONS IN INCHES
ADJACENT HOLE CENTRES & P.C. DIAS WITHIN ± .004"
ALL OTHER DIMENSIONS TO BE WITHIN ±
REMOVE SHARP CORNERS .010" TO .020"

UNLESS OTHERWISE STATED

SCALE :-

MATERIAL	TITLE	DRAWN	DEC 72	USED ON MODELS	ASSY. DRG. No	PART No
SPECIFICATION	FLASHERS, HAZARD, STOP LAMPS & REVERSING LAMPS CIRCUIT.	CHECKED		411 412		SKN 6170
		TRACED				

BRISTOL CARS
TILTON,
BRISTOL.

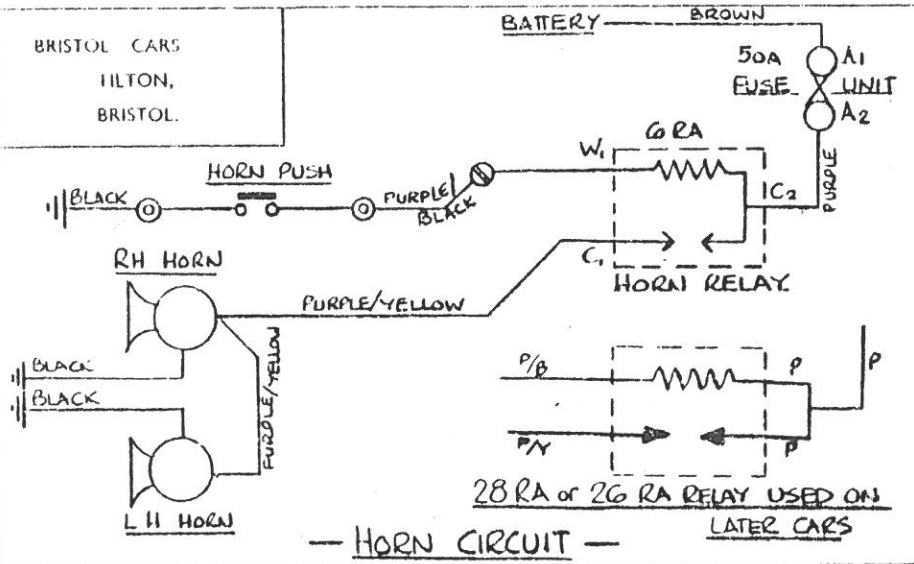

— HORN CIRCUIT —

28 RA or 26 RA RELAY USED ON LATER CARS

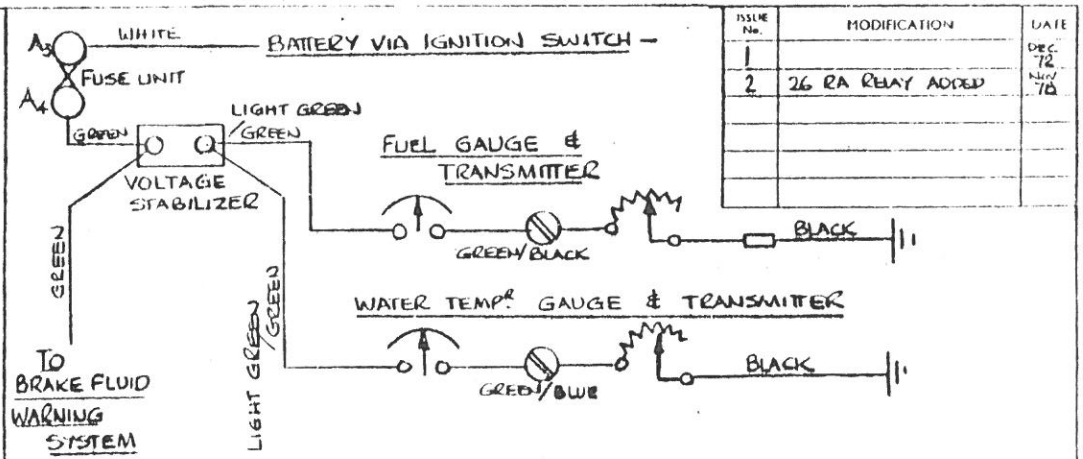

ISSUE No.	MODIFICATION	DATE
1		DEC 72
2	26 RA RELAY ADDED	NOV 73

FUEL & WATER TEMP. GAUGES

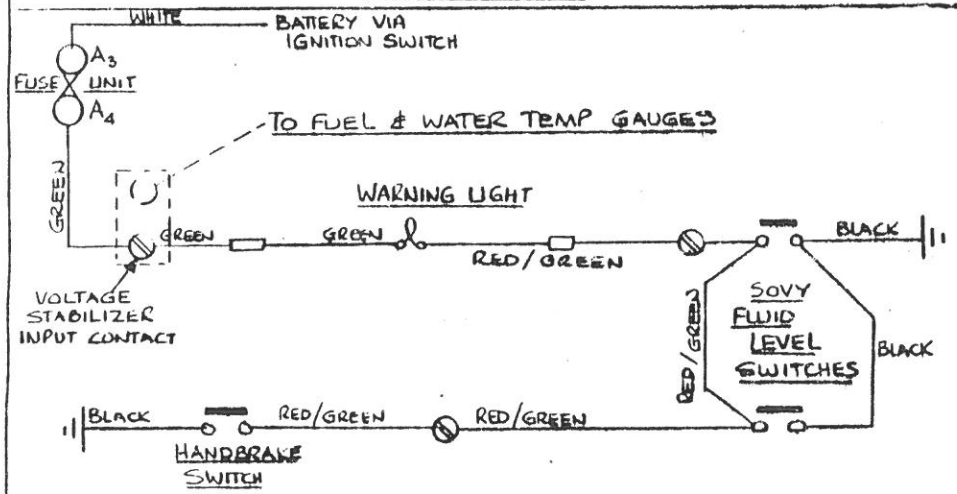

BRAKE FLUID LEVEL & HANDBRAKE WARNING LIGHT CIRCUIT

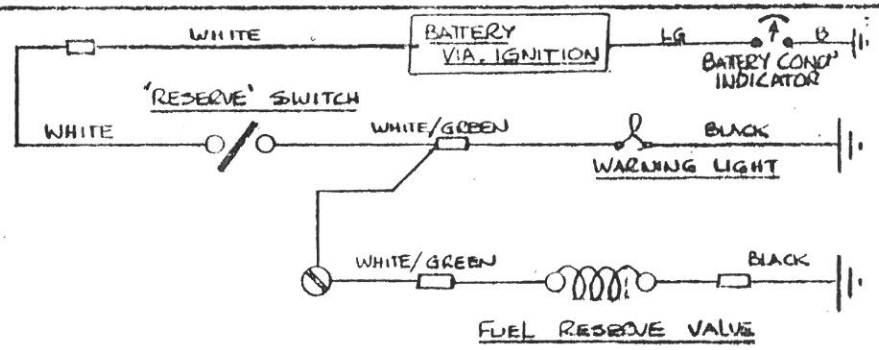

SEE B 680118 FOR LATER TYPE 412 INST.N

FUEL RESERVE & BATTERY COND.N INDICATOR

42

MATERIAL	TITLE HORN. FUEL & WATER TEMP.R BRAKE FLUID & FUEL RESERVE CIRCUIT	DRAWN	DEC 72	USED ON MODELS 411 412 &	ASSY. DRG. No	PART No SKN 6172
SPECIFICATION		CHECKED				
		TRACED				

BRISTOL CARS
FILTON,
BRISTOL.

ISSUE No.	MODIFICATION	DATE
1		JULY 73
2	412 DOOR LIGHTS ADDED	MAY 77

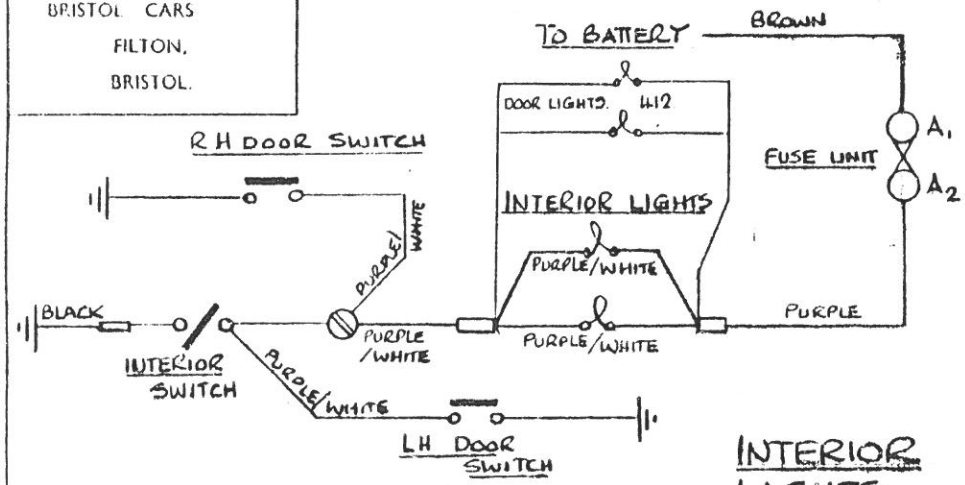

INTERIOR LIGHTS

SEE 412-D-68119 FOR LATER CARS

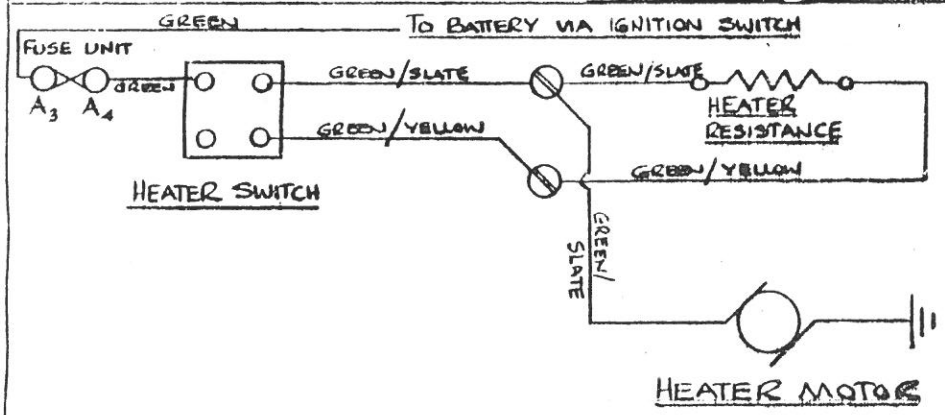

HEATER CIRCUIT

SEE 412-D-68069 FOR LATER 412 S2 & S3 CARS

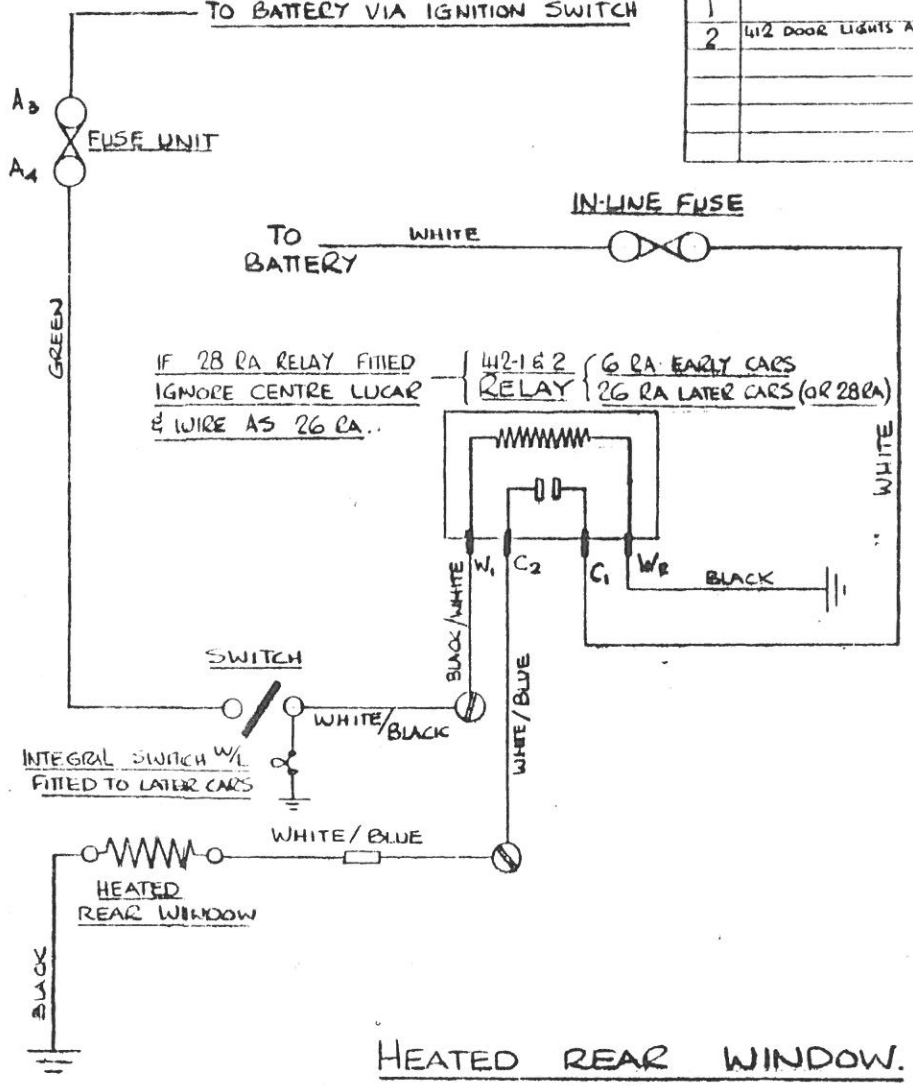

HEATED REAR WINDOW.

WHERE FITTED

MATERIAL		TITLE HEATER – HEATED REAR WINDOW & INTERIOR LIGHTS CIRCUITS	DRAWN		DEC 72	USED ON MODELS 411 412 &	ASSY. DRG. Nº	PART Nº SKN 6173
SPECIFICATION			CHECKED					
			TRACED					

43

BRISTOL CARS
FILTON.
BRISTOL.

ISSUE No.	MODIFICATION	DATE
1		Dec 72

1984 CARS HAVE LESS PANEL LIGHTS.

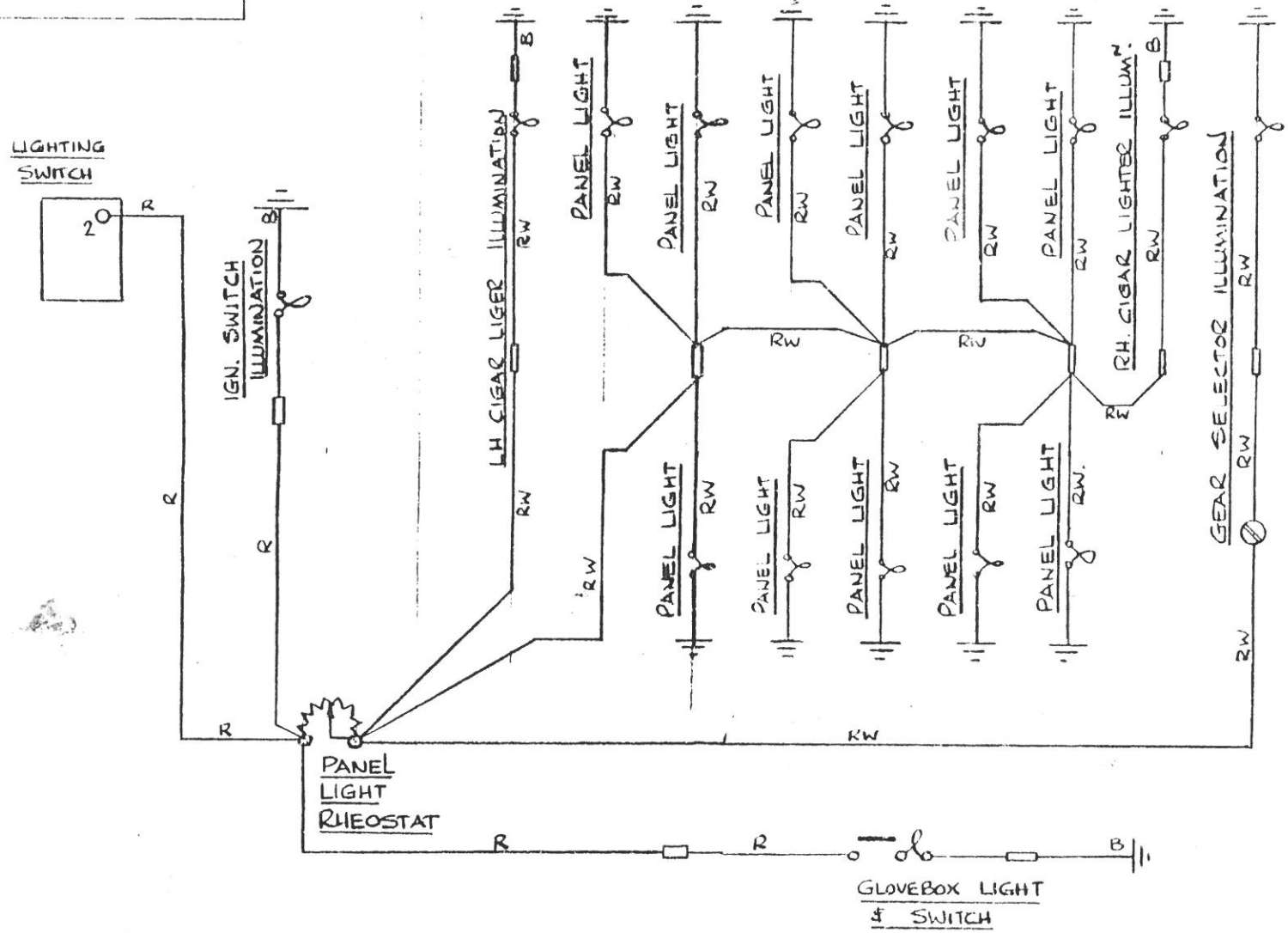

SYMBOLS & COLOUR CODE

R = RED
RW = RED/WHITE
B — EARTH VIA BLACK WIRE
EARTH VIA CASING
TERMINAL BLOCK SCREW
CONNECTOR

MATERIAL		TITLE	DRAWN		DEC 72	USED ON MODELS	ASSY. DRG Nº	PART Nº
SPECIFICATION		PANEL LIGHTS ~ GLOVEBOX ~ IGN SWITCH & CIGAR LIGHTER ILLUMINATION	CHECKED			411 412 &		SKN 6175
			TRACED					

44

BRISTOL CARS
FILTON,
BRISTOL

ISSUE No.	MODIFICATION	DATE
1		Dec 72
2	412-3 ADDED	March 84

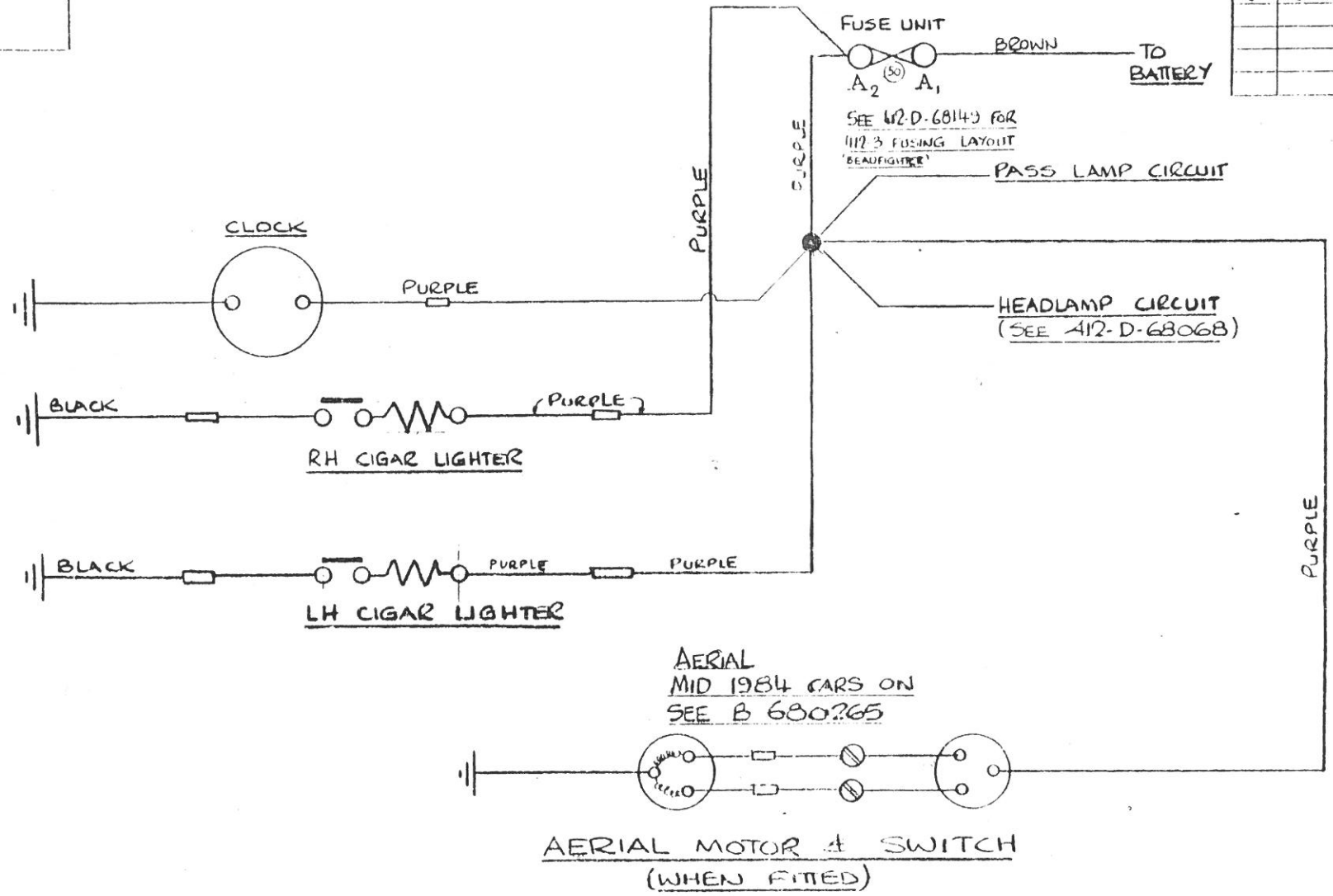

MATERIAL	TITLE	DRAWN	DATE	USED ON MODELS	ASSY. DRG. No	PART No
SPECIFICATION	CIRCUIT FOR CIGAR LIGHTERS, CLOCK & MOTORISED AERIAL	CHECKED	Dec 72	411 & 412 & SCAL		SKN 6174
		TRACED				

BRISTOL CARS LTD
FILTON
BRISTOL

ISSUE No.	MODIFICATION	DATE
1		
2	ELECTRIC CHOKE ADDED	
3	LEANBURN REF. ADDED	

FOR LEANBURN CARS
SEE B 680158

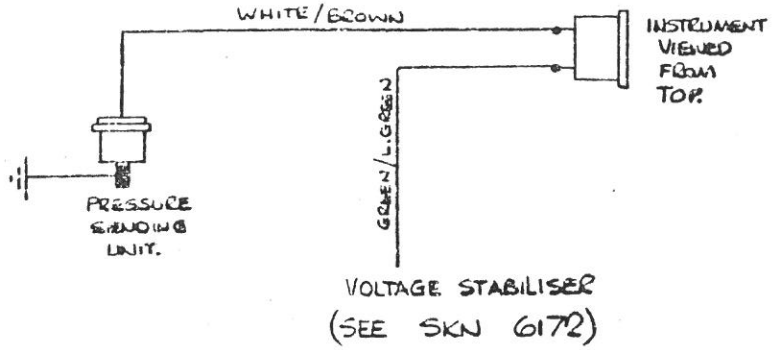

ELECTRICALLY OPERATED OIL PRESSURE UNIT (WHERE FITTED)

SOME 411 CARS

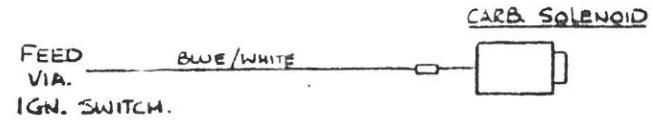

CARB^{R} SOLENOID - (CARTER THERMOQUAD)

SOME 411. — 603 & 412 (NON-LEANBURN)

FOR LEANBURN CARS
SEE B 680158

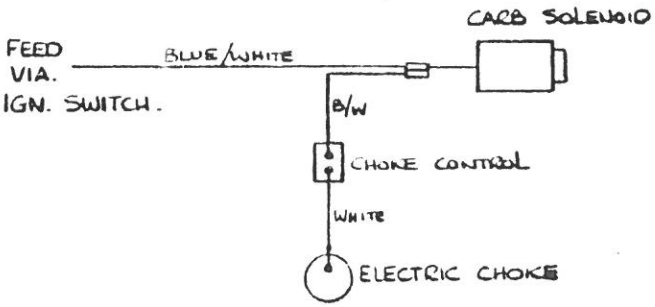

ELECTRIC CHOKE UNIT (WHERE FITTED)

SOME 411. — 603 & 412

ALL DIMENSIONS IN INCHES
ADJACENT HOLE CENTRES & P.C. DIAS WITHIN ± .004"
ALL OTHER DIMENSIONS TO BE WITHIN ± .
REMOVE SHARP CORNERS .010" TO .020"

UNLESS OTHERWISE STATED

SCALE:-

MATERIAL		TITLE ELECTRICAL OIL PRESSURE UNIT. CARB^{R} SOLENOID AND ELECTRIC CHOKE	DRAWN	FEB 74	USED ON MODELS 411 6, 412, & 41252	ASST. DRG. No
SPECIFICATION			CHECKED			
TREATMENT OR FINISH			TRACED			
		411. 412 & 603	APPROVED			

PART No SKN 6177

46

BRISTOL CARS
FILTON BRIST

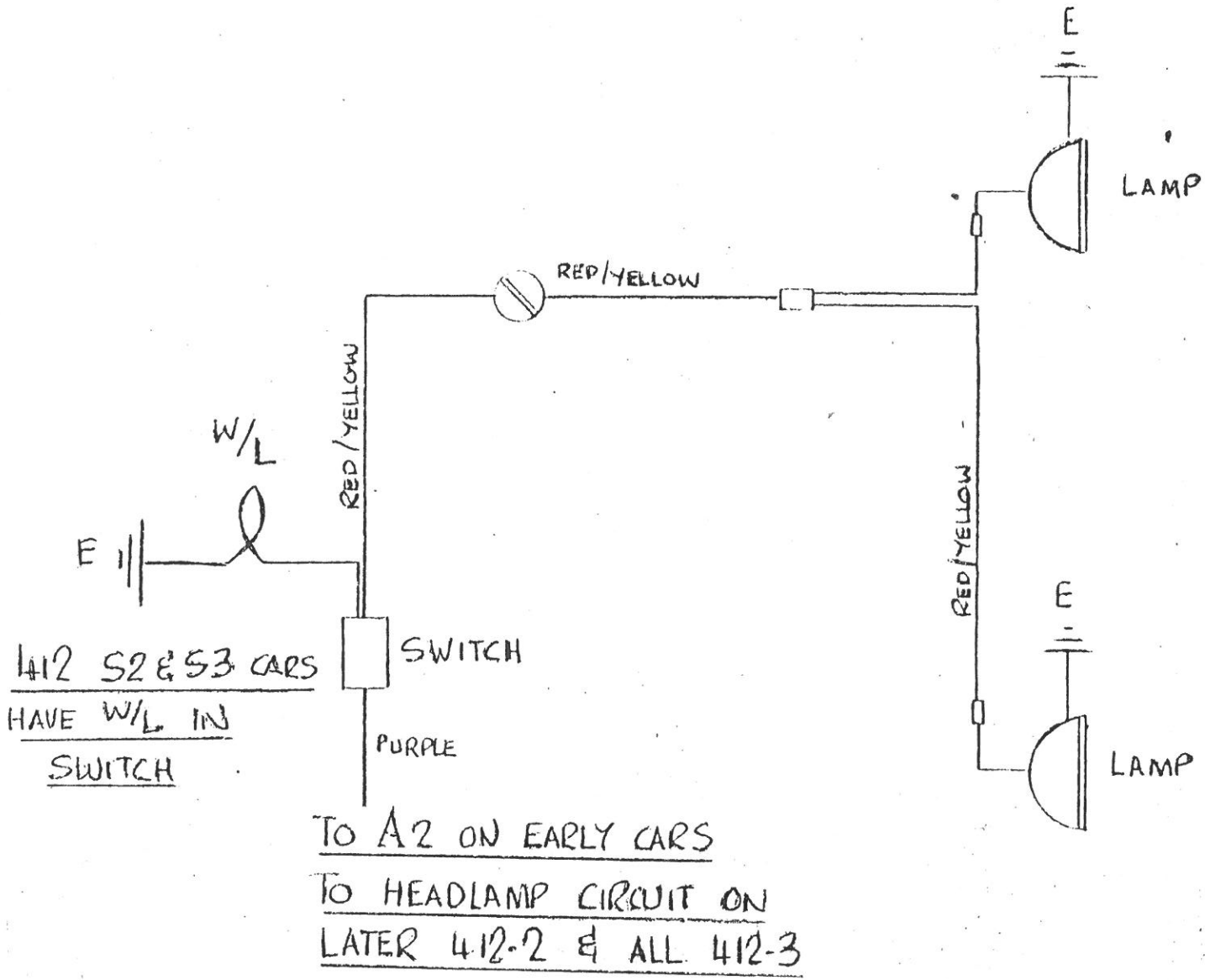

412 S2 & S3 CARS
HAVE W/L IN
SWITCH

TO A2 ON EARLY CARS
TO HEADLAMP CIRCUIT ON
LATER 412-2 & ALL 412-3

'REARGUARD'
(REAR FOG)

47

411-5 &
412

411-5-6802

BRISTOL CARS
FILTON,
BRISTOL.

B - BLACK
N - BROWN
R - RED.
S - SLATE (GREY)
Y - YELLOW.
U - BLUE
G - GREEN.
W - WHITE.

ISSUE No.	MODIFICATION	DATE
1		5/10/72

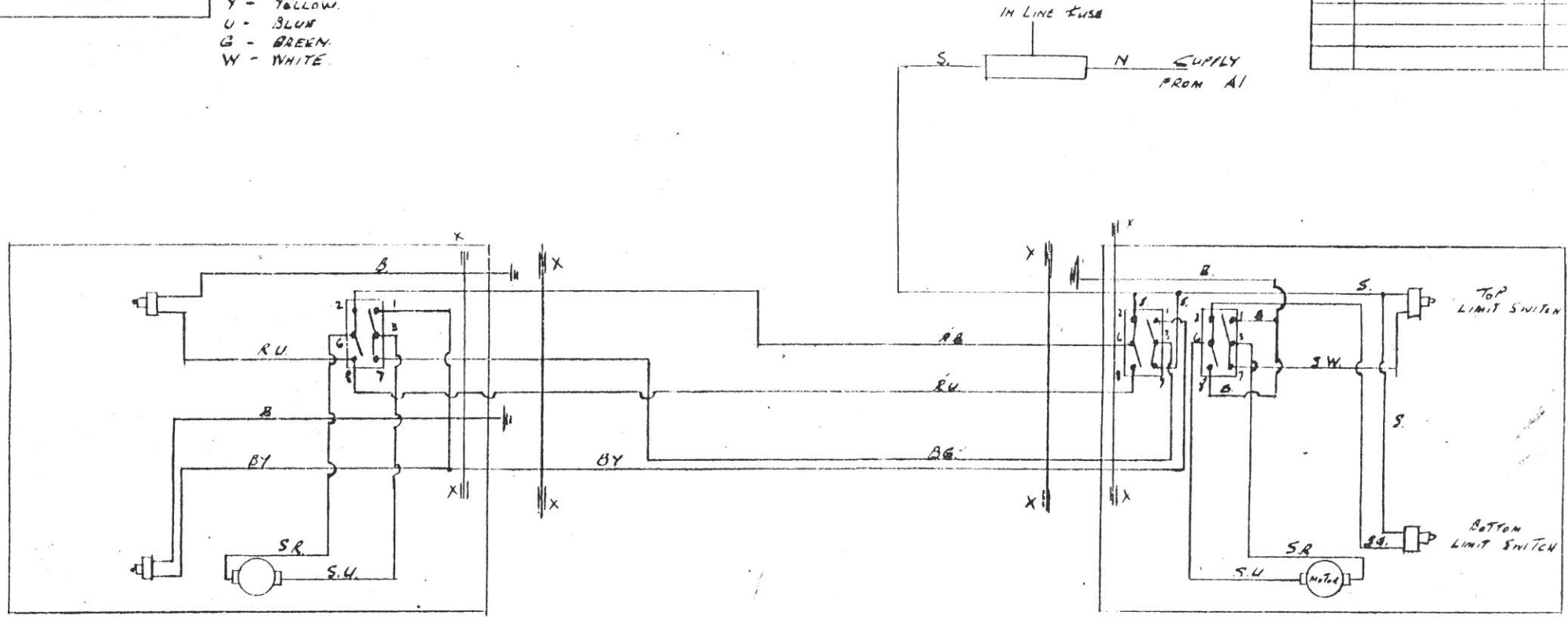

412 NOTE.
LIMIT SWITCHES REPLACED
BY CIRCUIT BREAKERS
(SEE ALSO 412-D-68067 FOR 412 MK1)

THIS CIRCUIT TO BE EFFECTIVE FROM 411
CHASSIS NO 411-7584 38

SNAP CONNECTORS TO BE FITTED AT LINES 'XX'
CABLES BETWEEN LINES 'XX' TO BE VERY
FLEXIBLE

— FOR L.H.D. CARS SEE 412-D-68117 —

ALL DIMENSIONS IN INCHES
ADJACENT HOLE CENTRES & P.C. DIAS WITHIN ± .004"
ALL OTHER DIMENSIONS TO BE WITHIN ± .
REMOVE SHARP CORNERS .010" TO .020"

UNLESS OTHERWISE STATED

SCALE:- —

MATERIAL
SPECIFICATION

TITLE
WINDOW LIFT CIRCUIT DIAGRAM
INCORPORATING LIMIT SWITCHES

DRAWN	HT	14/4/72
CHECKED		
TRACED		

USED ON MODELS: 411, 412
ASSY. DRG. No
PART No 411-2-68126

BRISTOL CARS
FILTON
BRISTOL

ISSUE No.	MODIFICATION	DATE
1		MAY 71

DOOR WIRING SEE 411-2-68126

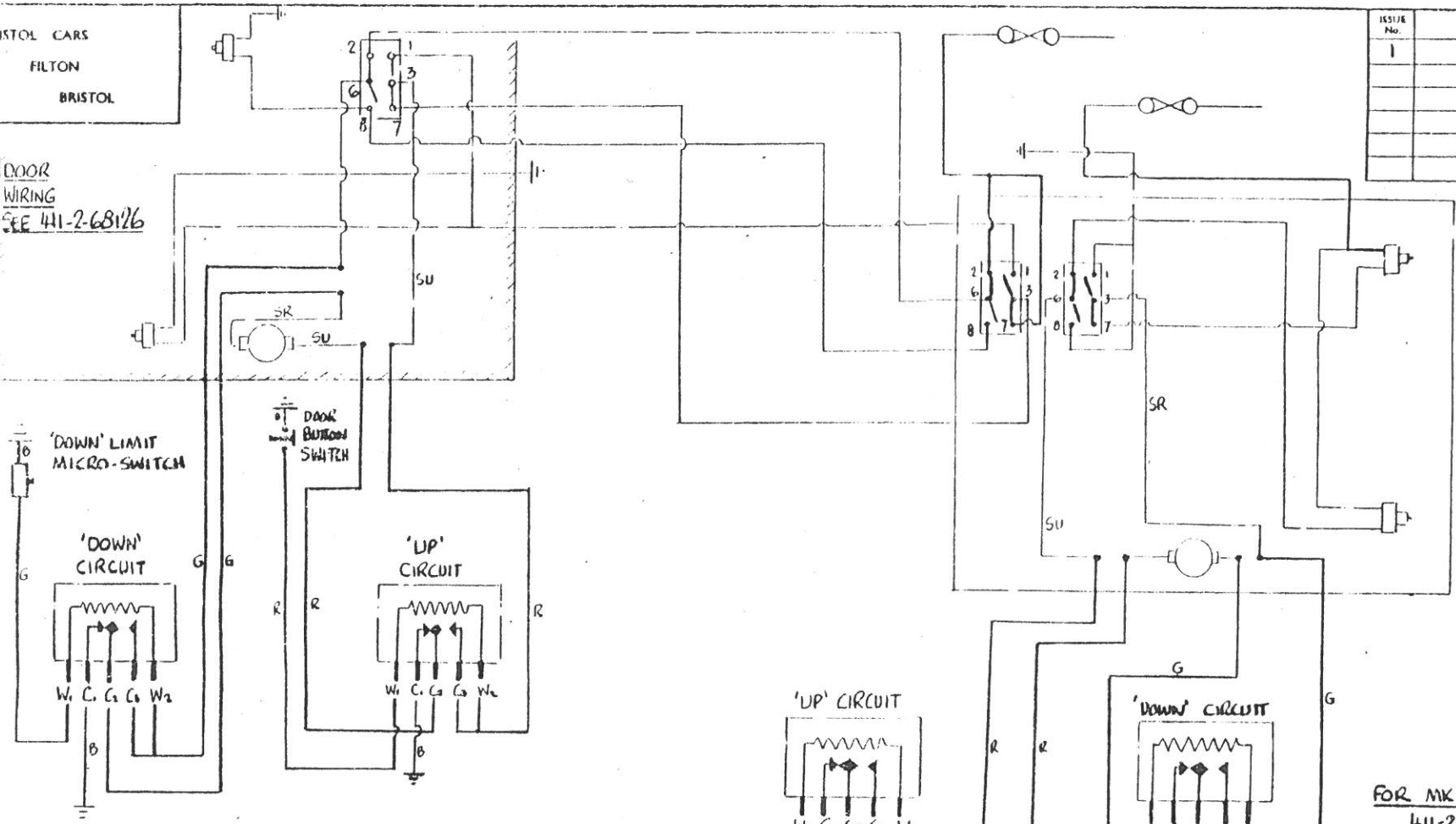

PASSENGER DOOR

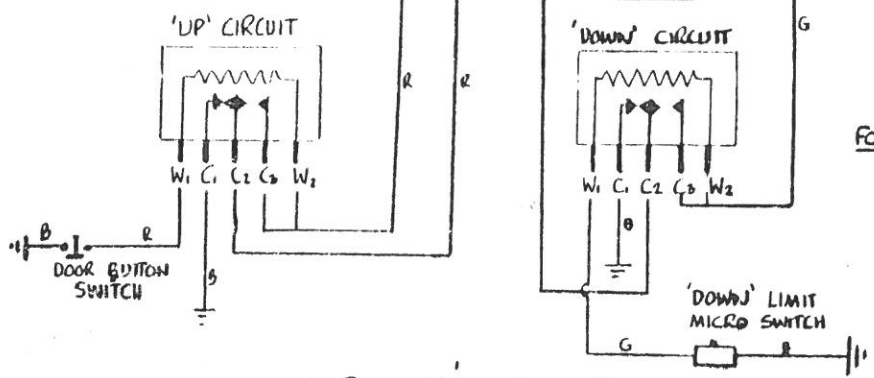

FOR MK II CARS SEE 411-2-68126

DRIVER'S DOOR

SCALE :- —

TITLE		DRAWN	MAY 71	USED ON MODELS	ASSY. DRG. No	PART No
CIRCUIT DIAGRAM		CHECKED		412 MK1		412-D-68067
AUTO-WINDOW LIFT SYSTEM		TRACED				

BRISTOL CARS
FILTON
BRISTOL

ISSUE No.	MODIFICATION	DATE
1		MAY '73
2	RELAY ADDED	JULY '73

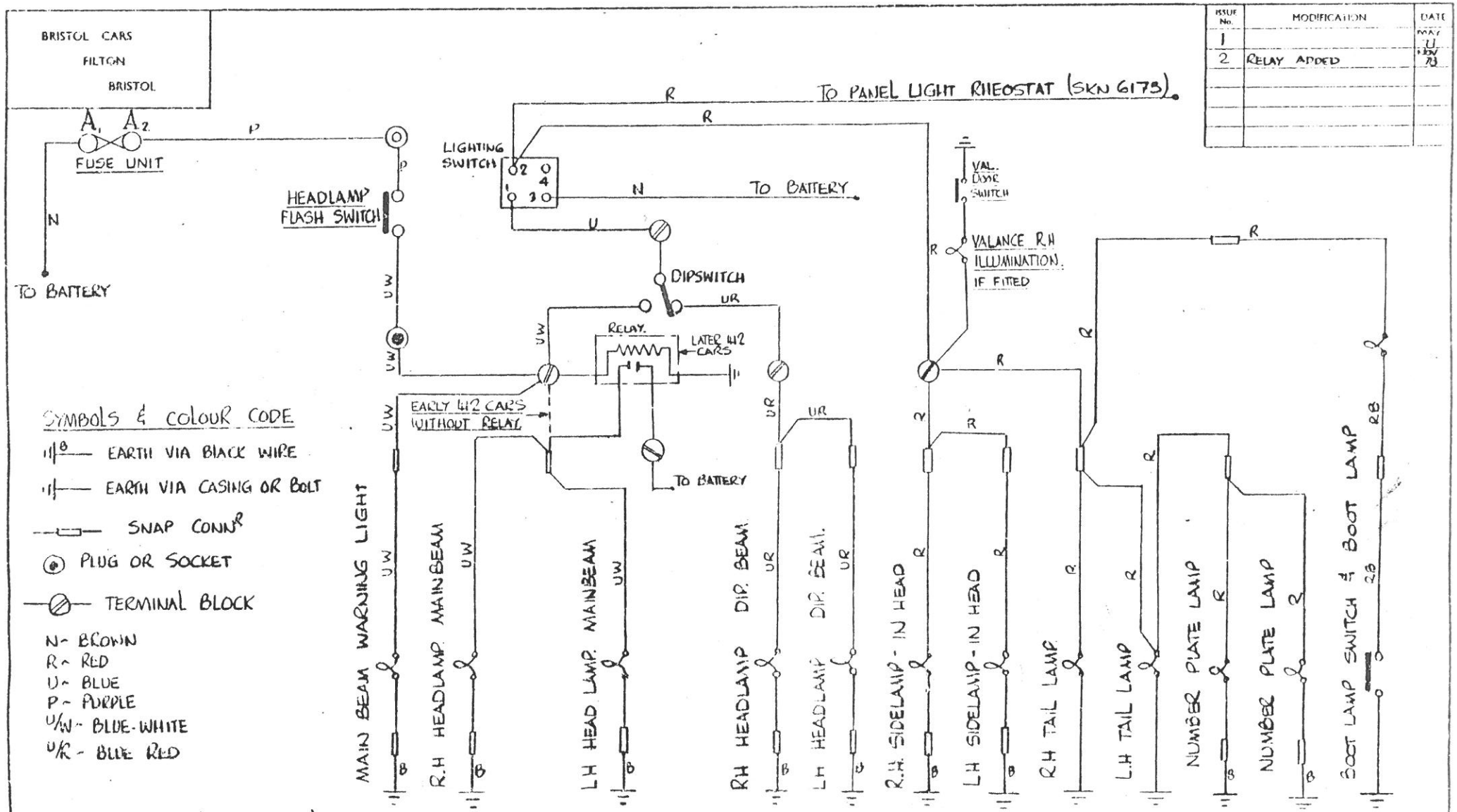

SYMBOLS & COLOUR CODE

- B — EARTH VIA BLACK WIRE
- EARTH VIA CASING OR BOLT
- SNAP CONN^R
- PLUG OR SOCKET
- TERMINAL BLOCK

N - BROWN
R - RED
U - BLUE
P - PURPLE
U/W - BLUE-WHITE
U/R - BLUE RED

ALL DIMENSIONS IN INCHES
ADJACENT HOLE CENTRES & P.C. DIAS WITHIN ± .004"
ALL OTHER DIMENSIONS TO BE WITHIN ± .
REMOVE SHARP CORNERS .010" TO .020"

UNLESS OTHERWISE STATED

SCALE :-

MATERIAL	TITLE HEADLAMPS. SIDE & TAIL LAMPS NUMBER PLATE & BOOT LAMPS WIRING DIAGRAM 412 CARS L.H R.H.D (NON-USA)	DRAWN	APRIL 77	USED ON MODELS 412	ASSY. DRG. Nº	PART Nº 412-D-68068
SPECIFICATION		CHECKED				
TREATMENT		TRACED				
		APPROVED				

BRISTOL CARS, FILTON, BRISTOL

ADJACENT HOLE CENTRES & P.C. DIAS WITHIN ± .004" UNLESS
ALL OTHER DIMENSIONS TO BE WITHIN ± OTHERWISE
REMOVE SHARP CORNERS .010" TO .020" STATED

ISSUE No.	MODIFICATION	DATE
1		MAY 77
2	MODELS ADDED	JAN 80

MK I CARS
FOR PREVIOUS CIRCUIT
SEE SKN 6173

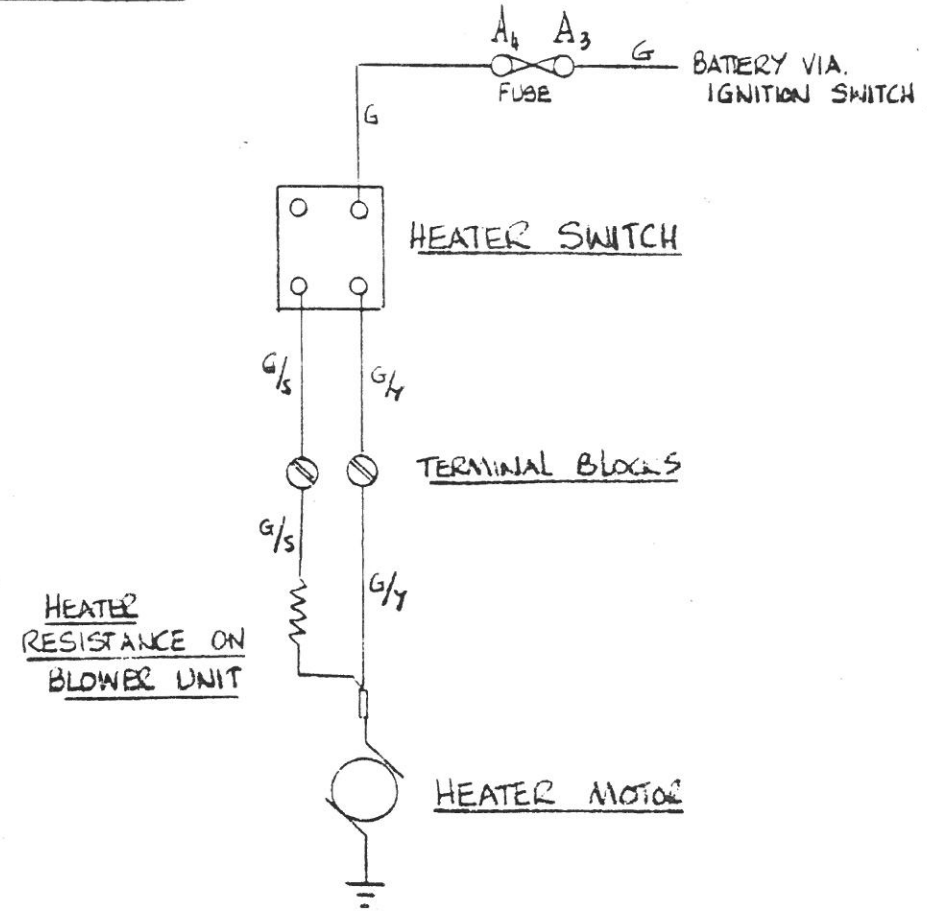

412 CARS WITH HEATER AIR INLET IN BONNET

SCALE:-

DRAWN		APRIL 77	TITLE	USED ON MODELS	ASSY. DRG.
CHECKED			HEATER CIRCUIT DIAGRAM	412 S2	
TRACED				603 S2	
APPROVED					
412 S2 & 603 S2 CARS					
MATERIAL			PART No		
SPECIFICATION			412-D-68069		
TREATMENT OR FINISH					

BRISTOL CARS
FILTON
BRISTOL

B = BLACK
N = BROWN
R = RED
S = SLATE (GRAY)
Y = YELLOW
U = BLUE
G = GREEN
W = WHITE

ISSUE No.	MODIFICATION	DATE
1		NOV 78

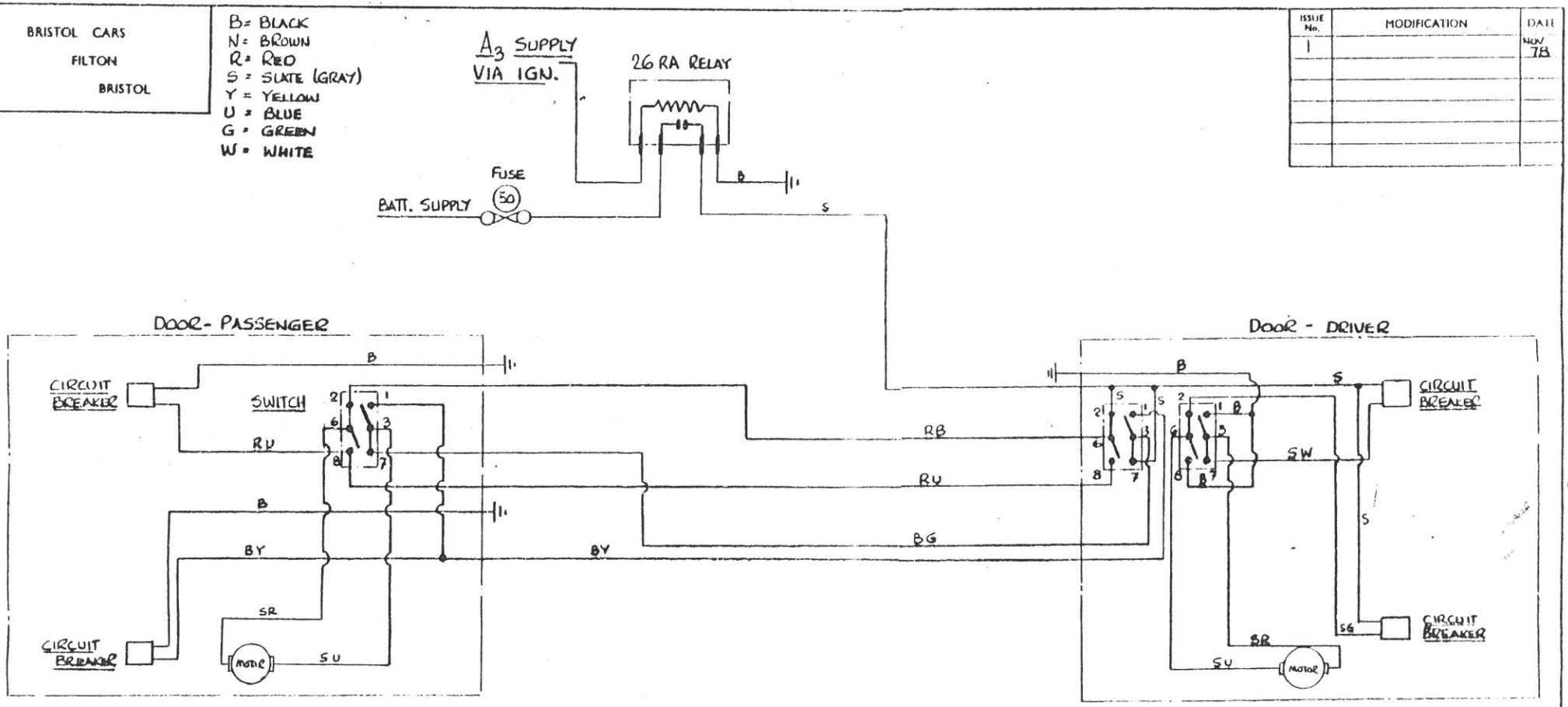

15

ALL DIMENSIONS IN INCHES
ADJACENT HOLE CENTRES & P.C. DIAS WITHIN ± ·004"
ALL OTHER DIMENSIONS TO BE WITHIN ± ·
REMOVE SHARP CORNERS ·010" TO ·020"

UNLESS OTHERWISE STATED

MATERIAL	TITLE	DRAWN	NOV 78	USED ON MODELS	ASSY. DRG. Nº	PART Nº
SPECIFICATION	CIRCUIT DIAGRAM WINDOW LIFT - (VIA IGN FOR USA)	CHECKED		412 LHD		412-D-68116
		TRACED				

BRISTOL CARS
FILTON
BRISTOL

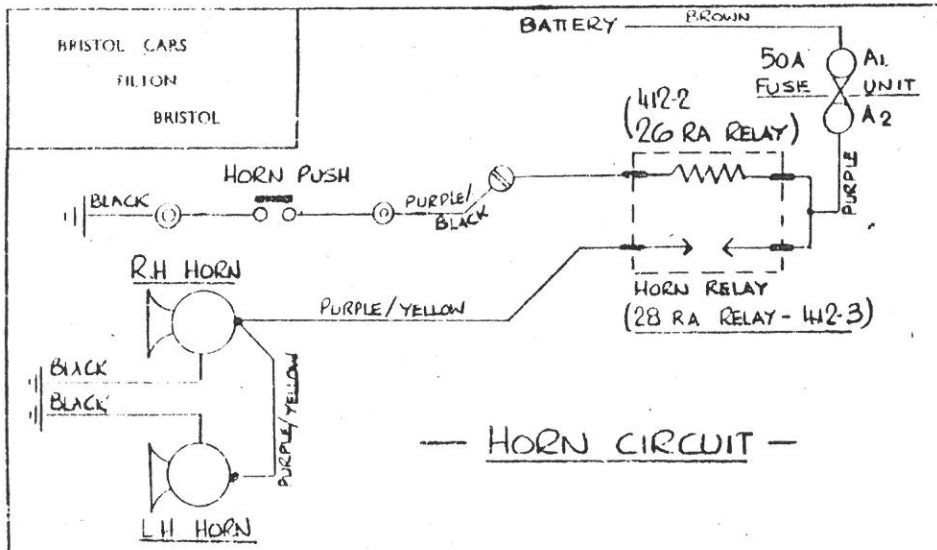

— HORN CIRCUIT —

ISSUE No	MODIFICATION	DATE
1		NOV '78
2	S3 ADDED	JULY '80

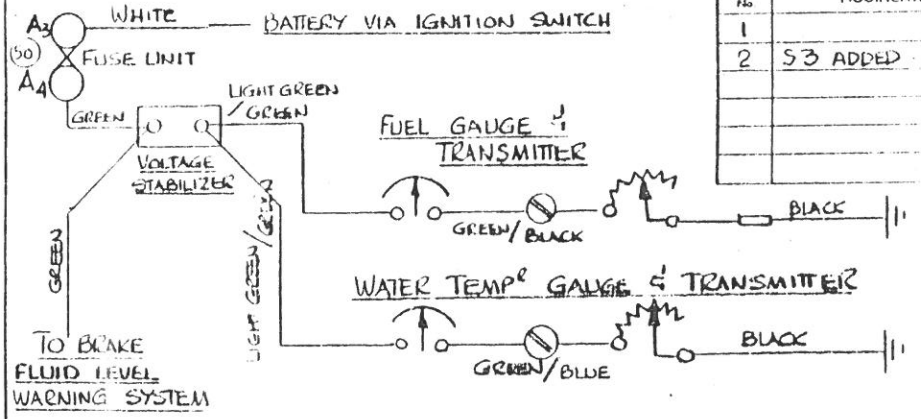

— FUEL & WATER TEMP.R GAUGES —

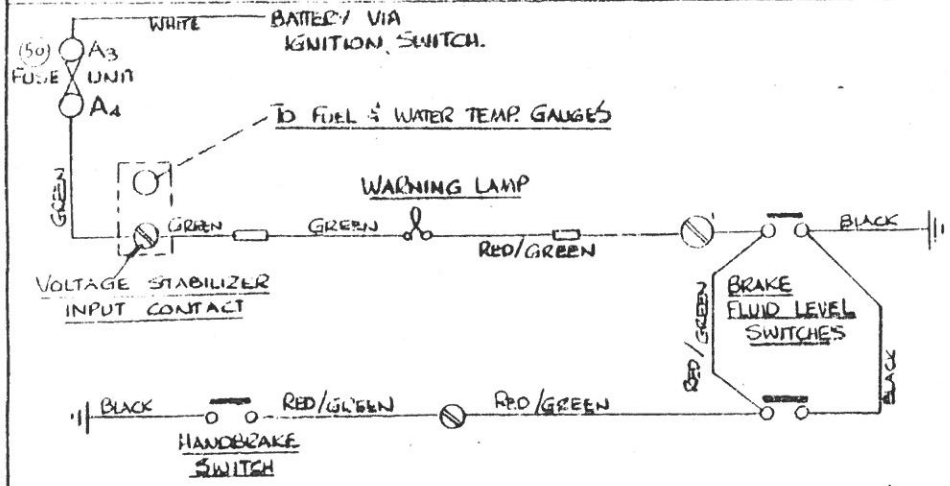

BRAKE FLUID LEVEL & HANDBRAKE W/L CIRCUIT.

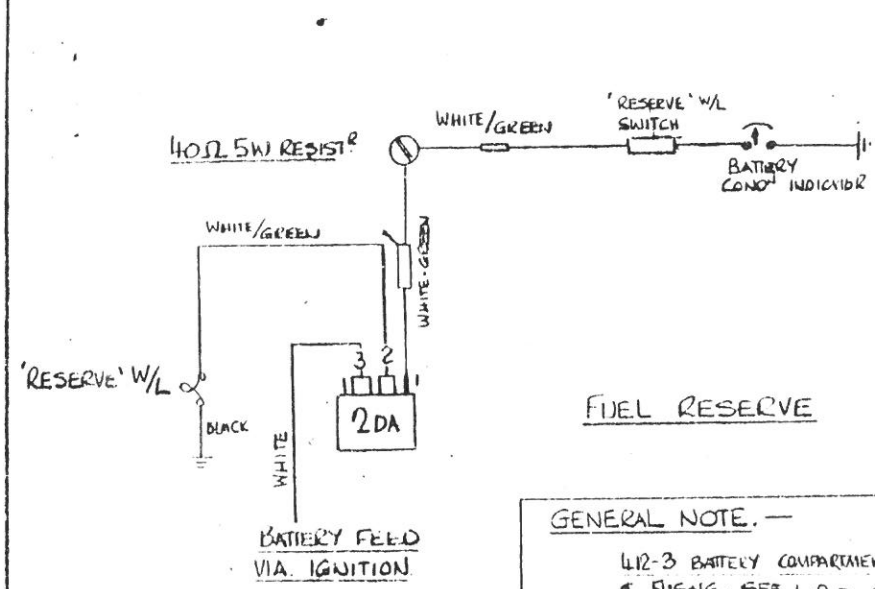

FUEL RESERVE

GENERAL NOTE. —

412-3 BATTERY COMPARTMENT WIRING & FUSING - SEE 412-D-68149

MATERIAL	TITLE WIRING DIAGRAM — HORN, FUEL, WATER TEMP.R BRAKE FLUID LEVEL, HANDBRAKE & FUEL RESERVE	DRAWN	NOV 78	USED ON MODELS	ASSY. DRG No	PART No
SPECIFICATION		CHECKED		412 S2 412 S3		412-D-68117
		TRACED				

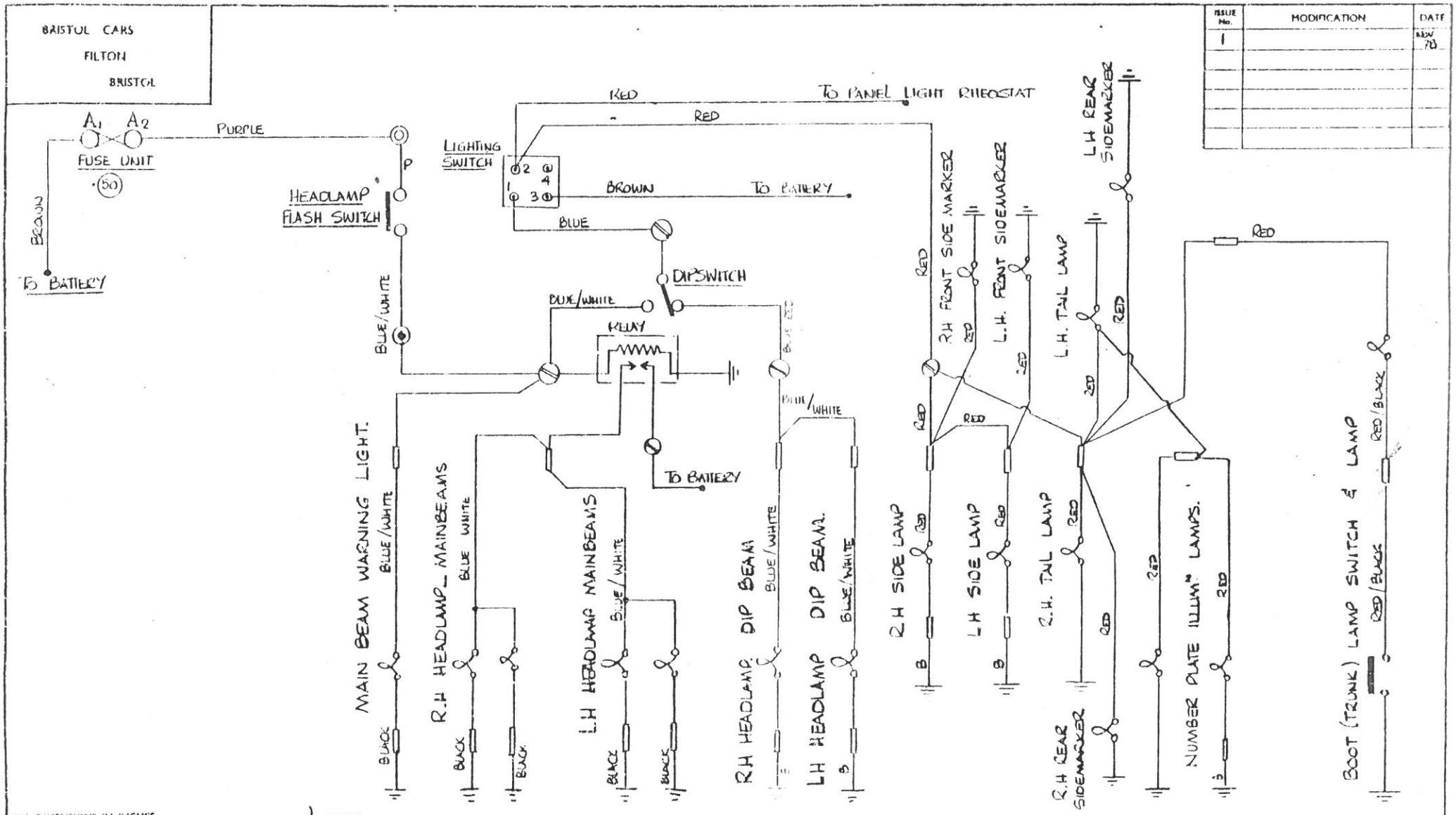

ALL DIMENSIONS IN INCHES
ADJACENT HOLE CENTRES & P.C. DIAS WITHIN ± ·004"
ALL OTHER DIMENSIONS TO BE WITHIN ± ·
REMOVE SHARP CORNERS ·010" TO ·020"

UNLESS OTHERWISE STATED

SCALE :-

MATERIAL		TITLE WIRING DIAGRAM. ~ SIDE & TAIL - HEADLAMPS	DRAWN	NOV 78	USED ON MODELS	ASSY. DRG. No	PART No
SPECIFICATION		NUMBER PLATE ILLM^N ~ SIDE MARKERS - TRUNK LAMPS	CHECKED		412 USA		412-D-68118
			TRACED				

BRISTOL CARS
FILTON
BRISTOL

COLOUR CODE & SYMBOLS

B = BLACK	GP = GREEN-PURPLE	TERMINAL BLOCK	B EARTH VIA CABLE
N = BROWN	PW = PURPLE-WHITE	SNAP CONNECTOR	EARTH VIA CASING OR BOLT
G = GREEN	GW = GREEN-WHITE	PLUG & SOCKET	
P = PURPLE	LGP = LIGHT GREEN-PURPLE		
GR = GREEN-RED	W = WHITE		
GN = GREEN-BROWN	LGN = LIGHT GREEN-BROWN		

ISSUE No.	MODIFICATION	DATE
1		NOV 78

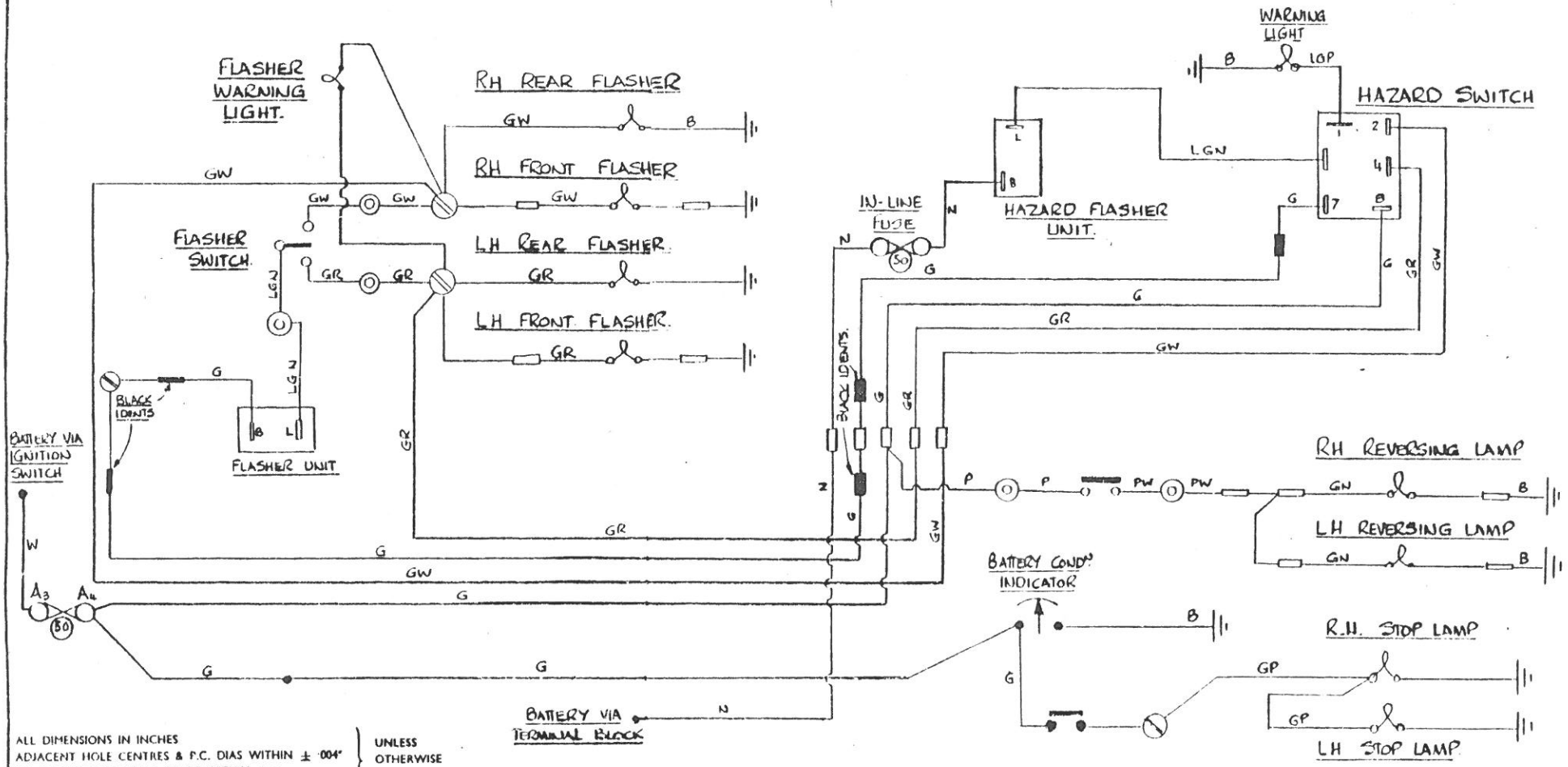

ALL DIMENSIONS IN INCHES
ADJACENT HOLE CENTRES & P.C. DIAS WITHIN ± ·004"
ALL OTHER DIMENSIONS TO BE WITHIN ± ·
REMOVE SHARP CORNERS ·010" TO ·020"

UNLESS OTHERWISE STATED

SCALE :-

MATERIAL	TITLE FLASHERS, HAZARD, STOPLAMPS, & REVERSING LAMP CIRCUIT.	DRAWN	NOV 78	USED ON MODELS	ASSY. DRG. Nº	PART Nº
SPECIFICATION		CHECKED		412 USA		412-D-68120
		TRACED				

BRISTOL CARS LTD.
FILTON
BRISTOL

ISSUE No	MODIFICATION	DATE
1		DEC 70

DIAGRAMMATIC WIPER MOTOR WIRING ~ INTERM.T WIPE & PROGRAMMED WASH-WIPE

SWITCH POSITIONS :—
INTERMITTENT ~ 2-4, 5-6
OFF 5-1, LOW 3-5
HIGH 3-7

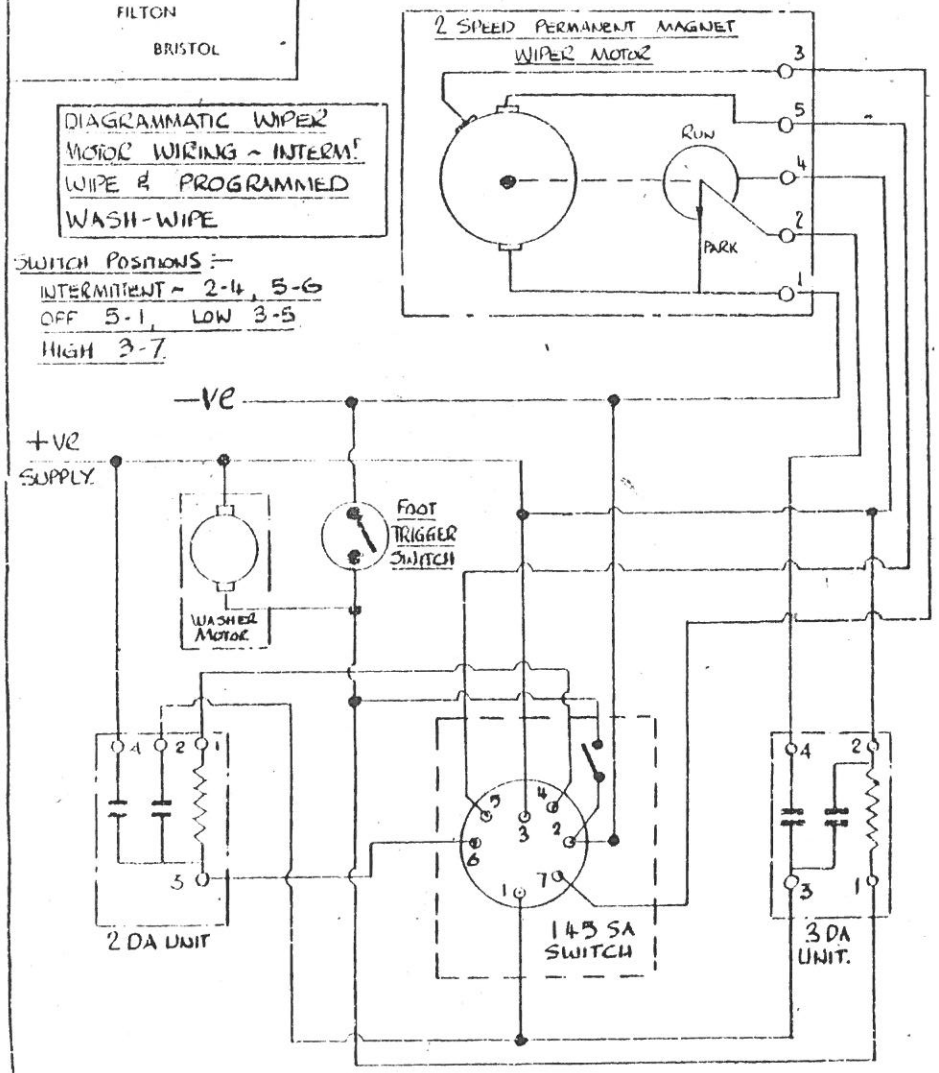

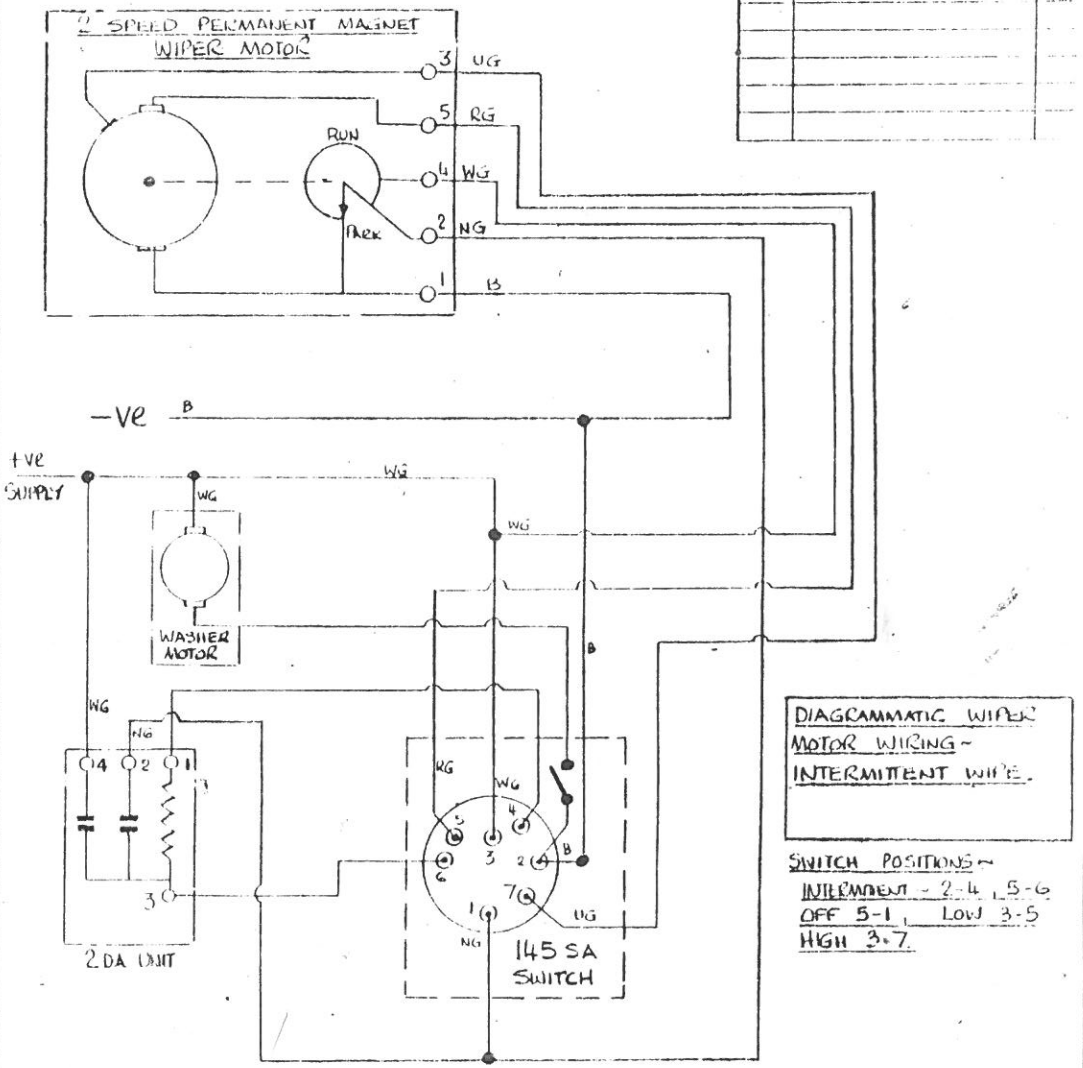

DIAGRAMMATIC WIPER MOTOR WIRING ~ INTERMITTENT WIPE.

SWITCH POSITIONS ~
INTERMITTENT ~ 2-4, 5-6
OFF 5-1, LOW 3-5
HIGH 3-7

412-3 (SONE)
(FOR COLUMN SWITCH INST" SEE 412-D-68160

ALTERNATIVES

TITLE	DRAWN	DEC 70	USED ON MODELS	ASSY DRG. No	PART No
WASH-WIPE CIRCUITRY	CHECKED		412 LHD		412- D- 68121
	TRACED				

BRISTOL CARS
FILTON
BRISTOL

ISSUE No.	MODIFICATION	DATE
1		DEC 73

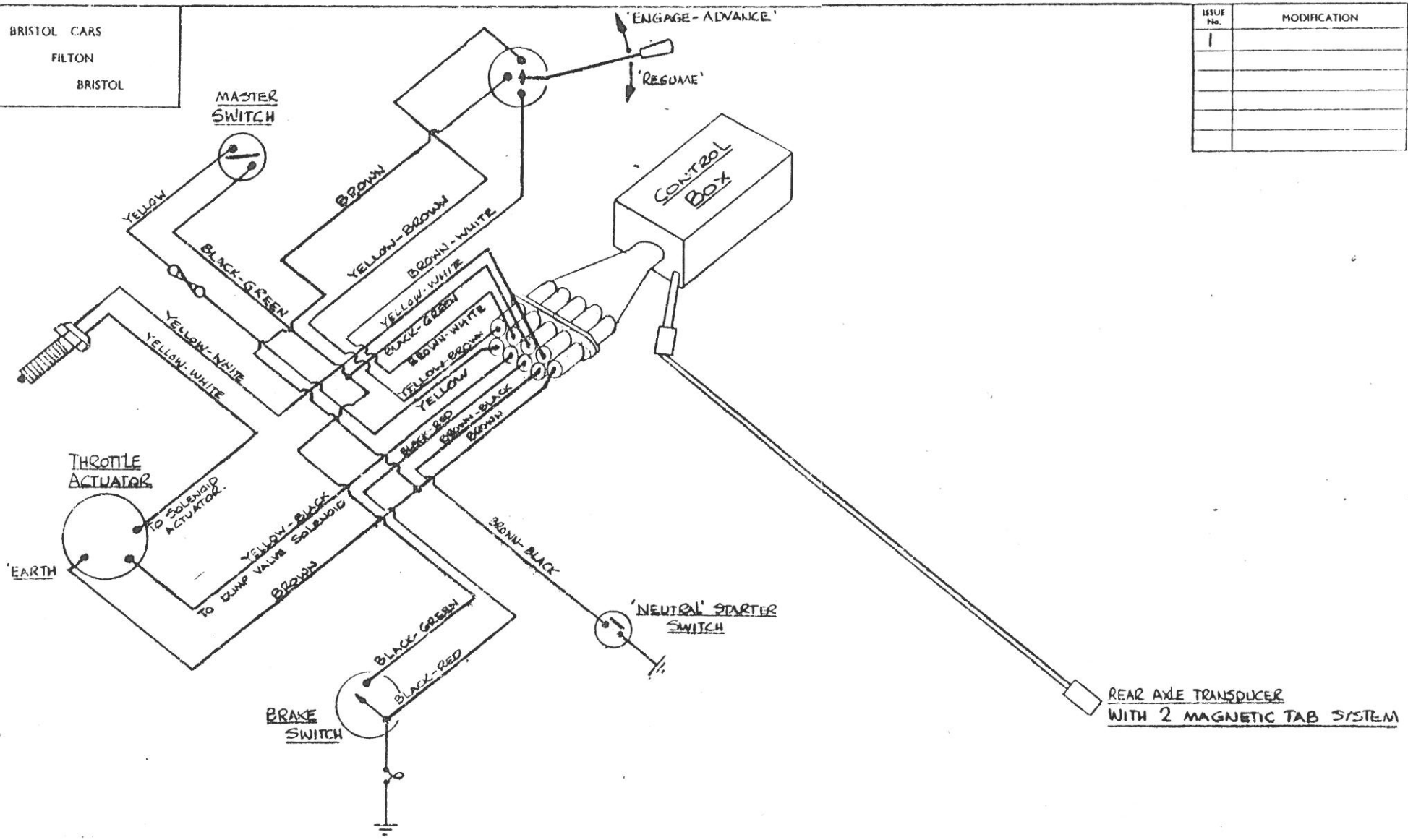

SCALE :-

TITLE	DRAWN	DEC 73	USED ON MODELS	ASSY. DRG. Nº	PART Nº
SPEED CONTROL WIRING	CHECKED		412 LHD		412-D-68122
	TRACED				

BRISTOL CARS
FILTON
BRISTOL

ISSUE No.	MODIFICATION	DATE
1		Dec 78
2	SOLENOID & TIMER MARKED AS REVERSED	

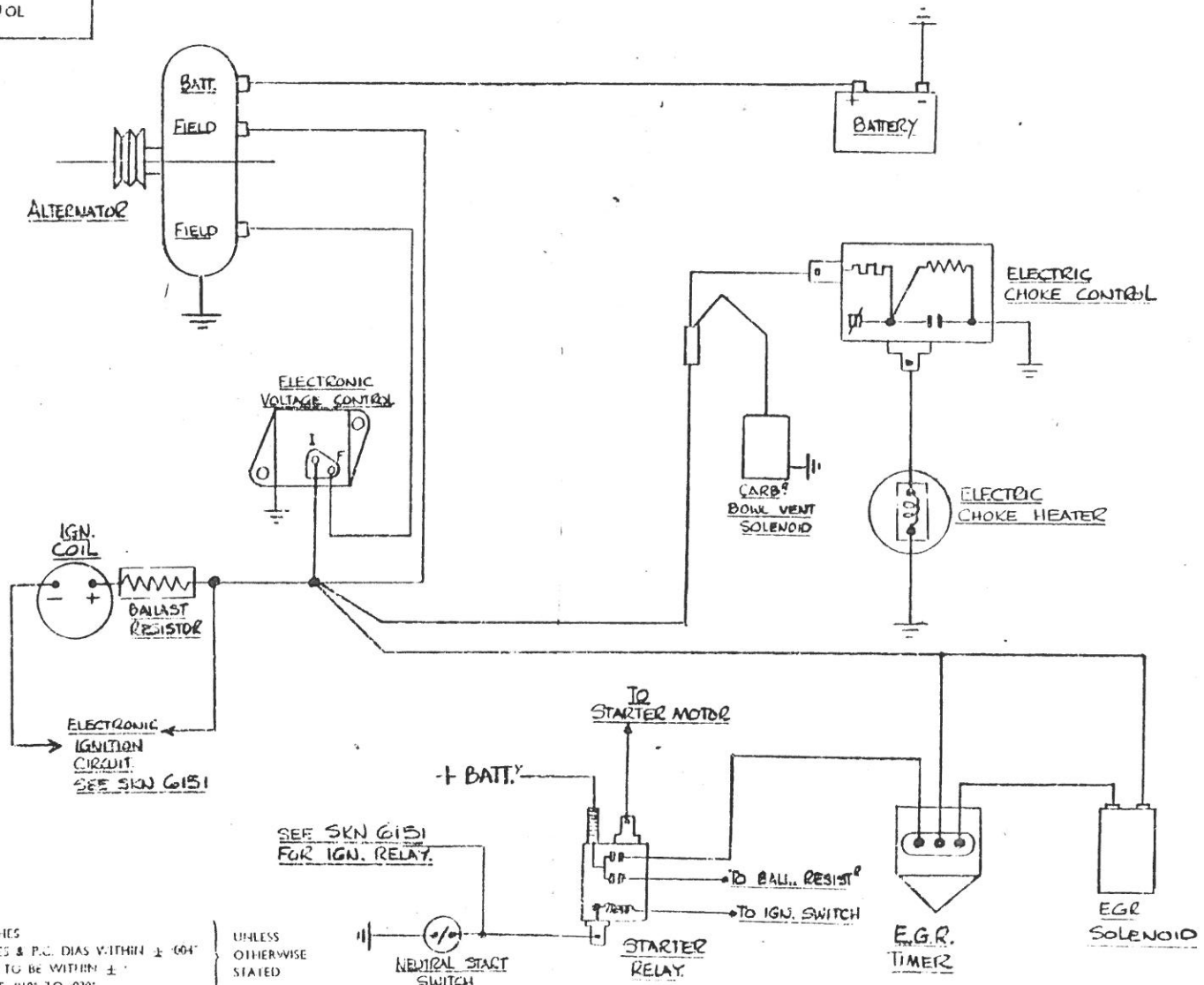

ALL DIMENSIONS IN INCHES
ADJACENT HOLE CENTRES & P.C. DIAS WITHIN ± ·004"
ALL OTHER DIMENSIONS TO BE WITHIN ± ·
REMOVE SHARP CORNERS ·010" TO ·020"

UNLESS OTHERWISE STATED

SCALE:-

MATERIAL
SPECIFICATION
TREATMENT & FINISH

TITLE ALTERN.? - VOLTAGE CONTROL - ELECTRIC CHOKE - CARB? BOWL VENT. - STARTER RELAY & EGR WIRING

412 L.H.D USA

DRAWN OFF
CHECKED
TRACED
APPROVED

USED ON MODELS: 412 LHD USA

ASSY. DRG No

PART No 412-D-68123

85

BRISTOL CARS
FILTON
BRISTOL

ISSUE No.	MODIFICATION	DATE
1		JAN 80

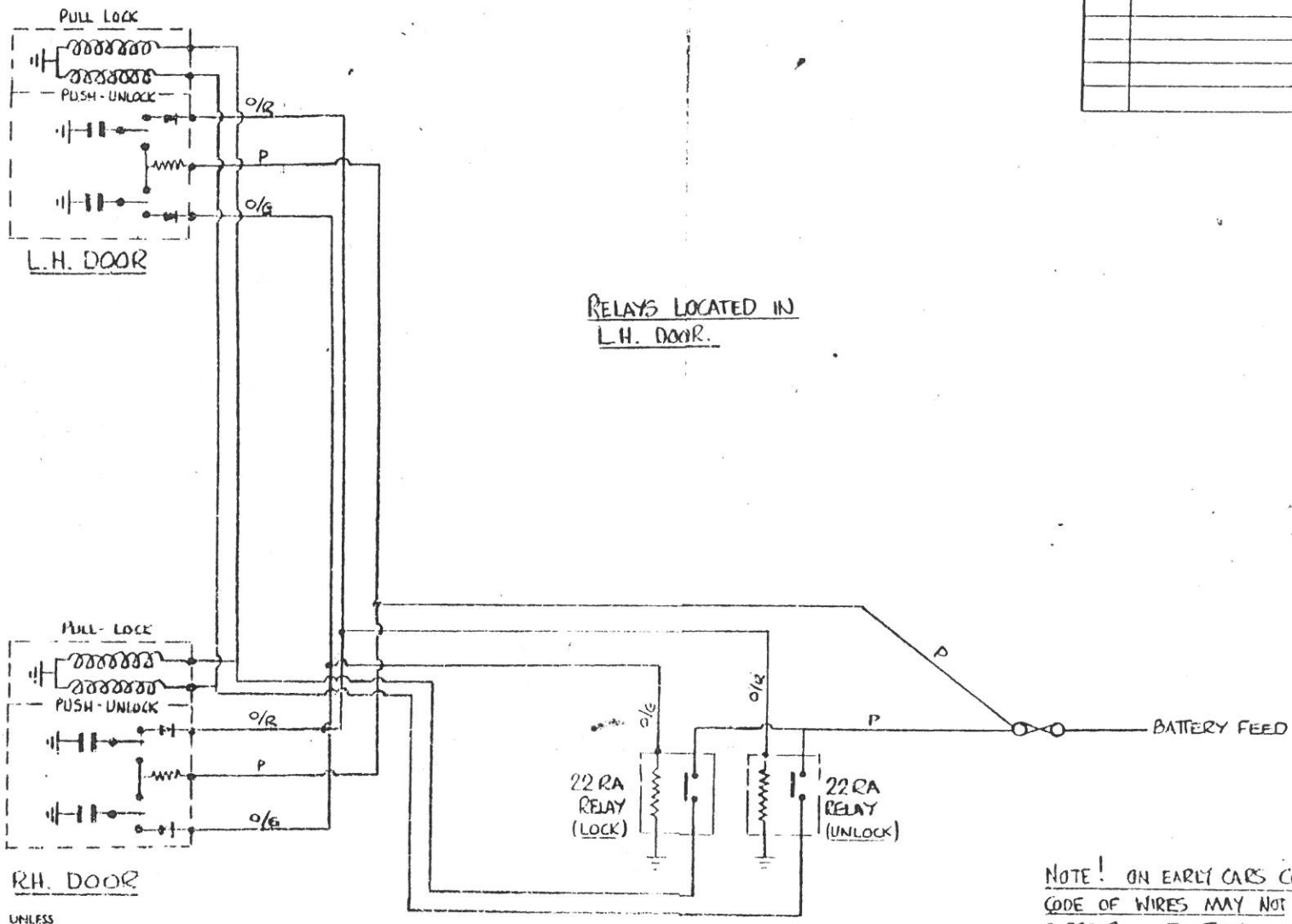

NOTE! ON EARLY CARS COLOUR CODE OF WIRES MAY NOT CORRESPOND TO THIS DIAGRAM

ALL DIMENSIONS IN INCHES
ADJACENT HOLE CENTRES & P.C. DIAS WITHIN ± ·004"
ALL OTHER DIMENSIONS TO BE WITHIN ± ·
REMOVE SHARP CORNERS ·010" TO ·020"
UNLESS OTHERWISE STATED

SCALE :- —

MATERIAL		TITLE	DRAWN	JAN 70	USED ON MODELS	ASSY. DRG. No	PART No
SPECIFICATION		WIRING - CENTRALISED DOOR LOCKING	CHECKED		442		L12-D-68135
			TRACED		6		

BRISTOL CARS
FILTON
BRISTOL

ISSUE No.	MODIFICATION	DATE
1		JAN 81
2	ALTERNATIVE SWITCH	APRIL 84

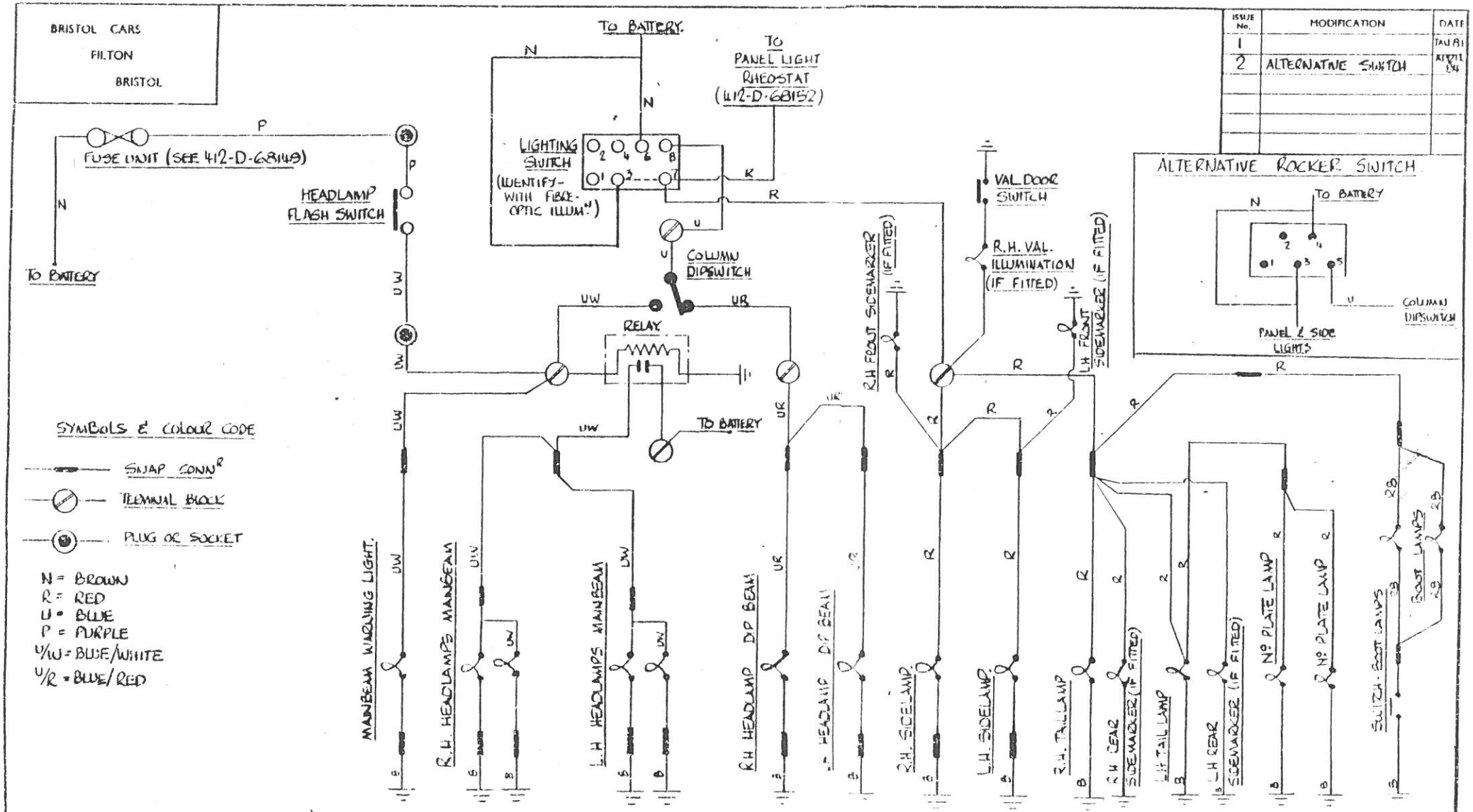

SYMBOLS & COLOUR CODE

SNAP CONNR
TERMINAL BLOCK
PLUG OR SOCKET

N = BROWN
R = RED
U = BLUE
P = PURPLE
U/W = BLUE/WHITE
U/R = BLUE/RED

ALL DIMENSIONS IN INCHES
ADJACENT HOLE CENTRES & P.C. DIAS WITHIN ± .001"
ALL OTHER DIMENSIONS TO BE WITHIN ±
REMOVE SHARP CORNERS .010" TO .020"
UNLESS OTHERWISE STATED

SCALE:-

MATERIAL	TITLE HEADLAMPS. SIDELAMPS & SIDEMARKERS, TAIL LAMPS. Nº PLATE ILLUMN & BOOTLAMP WIRING	DRAWN	JAN 81	USED ON MODELS	ASSY. DRG. Nº	PART Nº
SPECIFICATION		CHECKED		412-3 BEAUFIGHTER		412-D-68151
		TRACED				

60

BRISTOL CARS
FILTON
BRISTOL

ISSUE No.	MODIFICATION	DATE
1		JAN 81

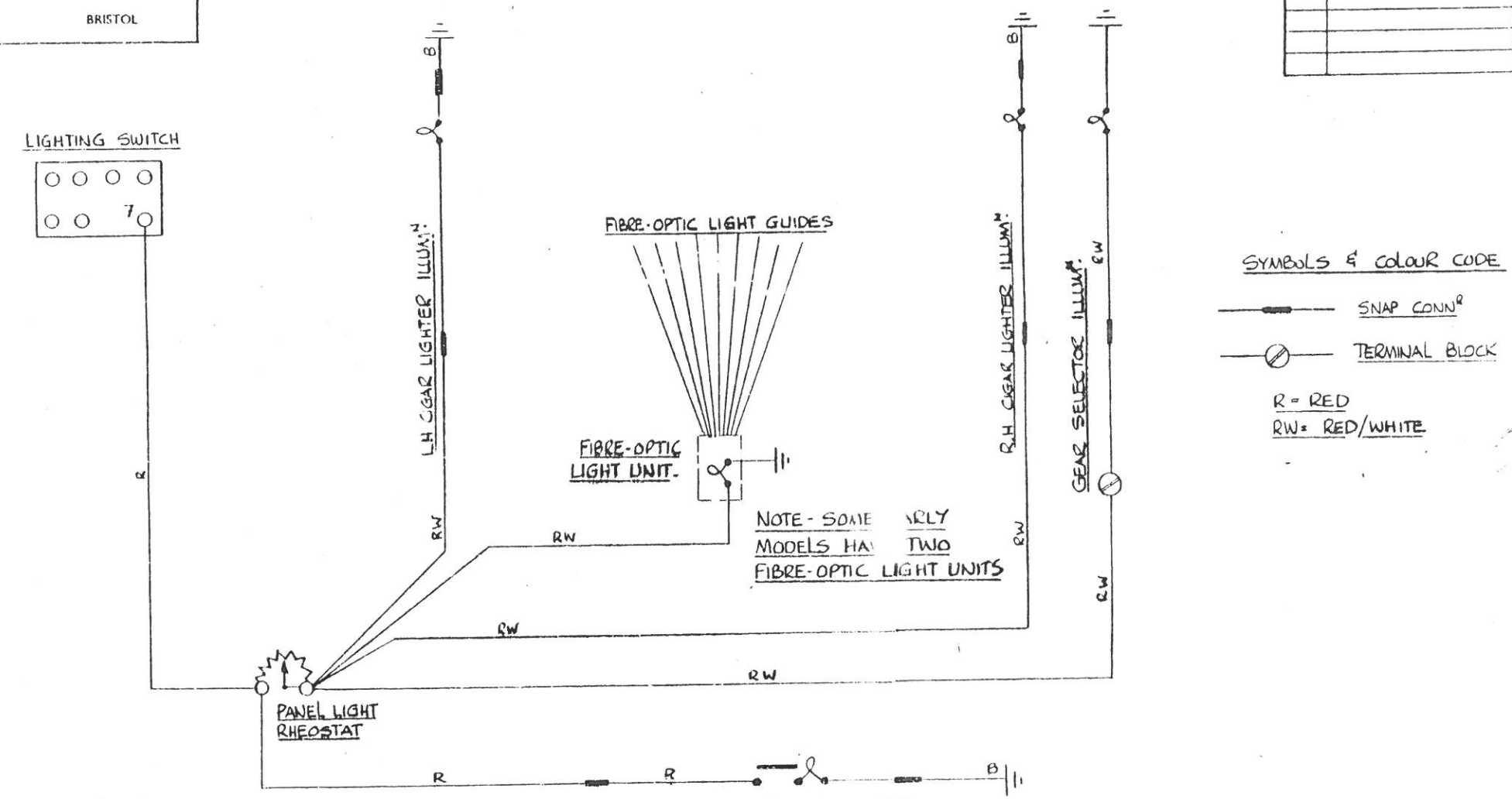

SYMBOLS & COLOUR CODE

SNAP CONN.

TERMINAL BLOCK

R = RED
RW = RED/WHITE

61

ALL DIMENSIONS IN INCHES
ADJACENT HOLE CENTRES & P.C. DIAS WITHIN ±
ALL OTHER DIMENSIONS TO BE WITHIN ±
REMOVE SHARP CORNERS .010" TO .020"

UNLESS OTHERWISE STATED

SCALE:-

MATERIAL

SPECIFICATION

TITLE PANEL LIGHT RHEOSTAT. FIBRE OPTIC UNIT
CIG. LIGHTER ILLUM. GLOVE BOX & G/S ILLUM WIRING

DRAWN	JAN 81	USED ON MODELS	ASSY. DRG. Nº
CHECKED		412-3 BEAU.	
TRACED			

PART Nº 412-D-68152