TORQUE-FLITE TRANSMISSION

The object of this booklet is to enable certain tests and operations to be carried out to the transmission unit while it is still in the car.

Never remove a transmission from a car until all possible checks 'in situ' have been made.

Quite apart from the checks listed numerically whenever the transmission fails to function properly, a check should be taken to ensure that the transmission fluid has not entered the engine coolant or vice-versa through an oil cooler leak.

The transmission oil cooler is embodied into the bottom tank of the radiator and it is not considered a removable item.

Function of the cooler

When the torque converter pressure rises to 30 p.s.i. the torque converter control valve allows the oil to flow through an external pipe to the oil cooler, where it loses some of its heat to the engine cooling water, and then returns to the transmission lubrication circuit via an external pipe. In the case of a cooler leak, engine coolant may become mixed with the transmission fluid. Transmission fluid may also enter the cooling system. Both the cooling system and the transmission should be checked in case the cooler is leaking.

Oil Cooler Test

(1) Disconnect both oil lines at the radiator.
(2) Connect a pressure gauge to one cooler connection and a shut off valve to the other. Close the valve.
(3) Connect a source of air pressure to the valve.
(4) Carefully open valve to admit no more than 50 p.s.i. to oil cooler before closing the valve. Gauge reading will then drop if cooler is leaking.

Replacing Oil Cooler

Should an oil cooler leak be detected, a replacement radiator should be fitted. It is not advisable to attempt repairs, since use of the wrong type flux and/or incorrect cleaning procedure after resoldering could lead to stress corrosion of the cooler.

Torque Converter Flushing

In the event a transmission becomes inoperative due to the failure of one of the components, it is imperative that the torque converter be thoroughly cleaned by flushing to remove all foreign material and prevent its re-entry into the hydraulic system after transmission servicing.

The following procedure is recommended for flushing the torque converter.

Slowly pour 2 quarts of new, clean kerosene into the torque converter hub using a long-spouted can. Before this can be done, it is necessary to reach into the torque converter with a screwdriver and turn the torque converter stator hub counter-clockwise (large splined hub) so that one of the $\frac{1}{8}$" x $\frac{3}{8}$" rectangular slots on this assembly is visible at the top. Since there is a second slot (directly below), an adequate opening is provided for the kerosene (if poured slowly). After the kerosene is in the torque converter, seal the hub opening with a cardboard cap and masking tape.

Rotate the converter approximately 10 seconds by cranking the engine with the starting motor, and the coil secondary cable disconnected to prevent engine from starting.

Drain the converter by removing the drain plug and masking tape.

Re-align the stator hub and repeat the above procedure until the drained kerosene is clear. To complete the flushing procedure, rotate the converter with the drain plug removed.

This will remove any residual solvent and trapped dirt. Re-install the drain plug or plugs. Install the transmission and fill with fluid as given in FLUID LEVEL.

10,000 Miles Transmission Maintenance Service

At every 10,000 miles it is recommended that the following operations should be carried out.

1. Remove the transmission sump and the oil strainer and clean. Page 26.
2. Adjust the Low-Reverse Band. Page 19.
3. Adjust the Kickdown Band. Page 19.
4. Adjust the Push Button Cable. Page 9.

INDEX OF CHECK ITEMS

1. FLUID LEVEL. Page 5.
2. THROTTLE LINKAGE ADJUSTMENT. Page 7.
3. GEARSHIFT CONTROL CABLE ADJUSTMENT. Page 9.
4. PRESSURE CHECKS. Page 11.

   Line Pressure
   Governor
   Lubrication Pressure
   Rear Clutch Apply Pressure
   Throttle (Compensated) Pressure

5. KICKDOWN BAND ADJUSTMENT. Page 19.
6. LOW-REVERSE BAND ADJUSTMENT. Page 19.
7. ENGINE IDLE. Page 19.
8. NEUTRAL STARTING SWITCH. Page 20.
9. REGULATOR VALVE. Page 21.
10. TORQUE CONVERTOR CONTROL VALVE. Page 23.
11. BREATHER. Page 24.
12. TORQUE CONVERTOR COOLING. Page 26.
13. REMOVE THE TRANSMISSION SUMP AND OIL STRAINER. Page 26.

OPERATION DIFFICULTY.	ITEMS TO CHECK.
Shift Irregularities	
Harsh N to D or N to R	4-6-7
Delayed N to D	1-4
Runaway on Upshift and 3-2 Kickdown	1-2-4-5
Harsh Upshift and 3-2 Kickdown	2-4-5
No Upshift	1-2-4-5
No Kickdown or Normal Downshift	1-2-3-4-5
Shifts erratically	1-2-3-4-7-10

	ITEMS TO CHECK.
Response	
Slips in Forward and Drive Position	1-4
Slips in L and R only	4-6
Slips in all positions	1-4-9
No Drive in any position	1-4-9
No Drive in forward ranges	4-5
No Drive in R	4-6
Drives in N	3
Miscellaneous	
Drags or Locks	5-6
Buzzing Noises	1-9-10
Transmission Hard to fill, Oil blows out of Filler Tube	1-9-10-11
Transmission Overheats	1-5-6-9-10
Impossible to push start	1-4-6

SPECIAL TOOLS REQUIRED FOR TRANSMISSION MAINTENANCE SERVICE

Chrysler Tool Number	Description
C-3293	Pressure Gauge 300 p.s.i.
C.3292	Pressure Gauge 100 p.s.i.
C.3380	Torque Wrench
C.3705	Kickdown Band Adjustment Adaptor (use with standard socket).
C.3790	Low and Reverse Band Adjustment Adaptor (use with standard socket).

FLUID LEVEL

Checking Fluid Level

The fluid level should be checked at regular intervals. It is desirable that this check be made when the engine temperature gauge shows a normal warm condition, indicating that the fluid in the transmission has been heated to its normal operating temperature.

The dipstick for the transmission is completely separate from the engine although it is situated in the engine bay, under the bonnet, on the right-hand side, at the rear, close to the bulkhead, see Fig. 1.

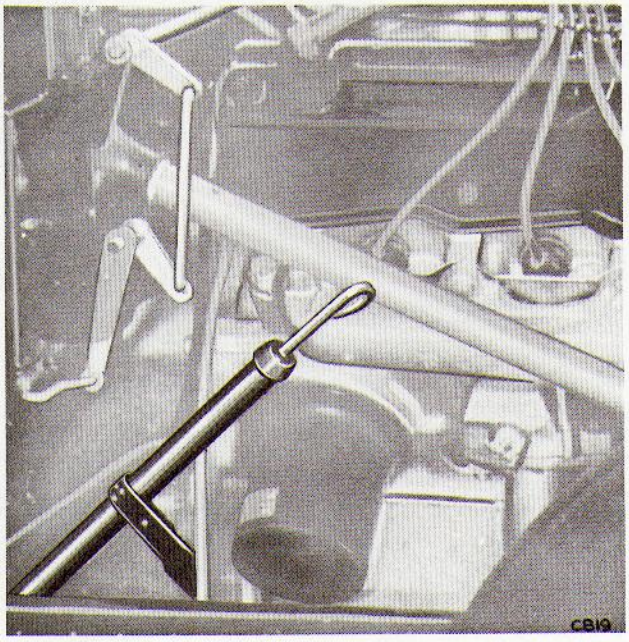

Fig. 1 Location of Transmission Dipstick

Draining is carried out by disconnecting the lower end of the filler tube from the transmission sump.

Procedure for checking fluid level

(1) With the handbrake on and the engine idling, operate all push buttons, pausing momentarily at each position and ending with the (N) neutral button pushed in.

(2) Check the fluid level at the transmission dipstick. The fluid level should be at the 'F' mark or slightly below, but never above the 'F' mark at its normal condition. Add, or if necessary, remove fluid to bring it to this level.

(3) If it should be necessary to check the fluid level when the transmission is cold, the fluid level should be at, or slightly below the 'L' or 'Add one pint' mark. If below, add one pint of fluid and then recheck the level.

Caution. To prevent dirt from entering the transmission make sure that the dipstick cap is seated properly on the filler tube.

Transmission - Drain and Refill

Drain

(1) Disconnect the filler tube from the transmission sump and allow to drain.

(2) Remove the flywheel access plate situated forward of the transmission sump and line the torque converter until the drain plug can be removed. This component can be revolved by hand if the sparking plugs are removed, but otherwise it is necessary to revolve it by careful levering with a screwdriver or the like.

(3) Replace the torque converter drain plug and refit the flywheel access plate.

(4) Refit the transmission filler tube.

Refill

(1) Add 10 pints (5.68 litres) of recommended fluid through the filler tube. Filling is best carried out by using a funnel and a suitable piece of rubber hose fitting neatly over the top of the filler tube.

(2) Start the engine and add approximately 6 pints (3.41 litres) more, with the engine idling.

(3) Allow the engine to idle for at least 2 minutes.

(4) With the handbrake on and the engine idling, operate all push buttons, pausing momentarily at each position and ending with the 'N' neutral button pushed in.

(5) Check the level and add or remove fluid as necessary (see checking Fluid level).

THROTTLE LINKAGE ADJUSTMENT

SETTING INSTRUCTIONS

Requirements 1 piece of 3/16 inch diameter Silver Steel 6½ inches long.

Setting the throttle is carried out in two separate operations:-
Positioning the Linkage. Positioning the Pedal Stop.

The following procedure should be used, Fig. 2.

(1) Loosen the adjusting nuts on the Accelerator shaft to Transmission rod (C) and the Accelerator shaft to the carburettor rod (D).

(2) Insert the 3/16 inch diameter rod through the holes in the two nearside top brackets and into the hole in the lever (E).

(3) Move transmission throttle lever (F) forward until it stops. Tighten nut (C) securely. This positions the Accelerator shaft.

(4) Slide the 3/16 diameter rod out of Lever (E), but still located in the brackets, and hold Transmission Lever (F) fully forward. Carefully check the alignment of the hole in lever (E), with the rod, and reset if the hole in the brackets and lever are not accurately aligned. When alignment is satisfactory, remove the rod entirely.

(5) Remove the engine Air Cleaner and see that the neutral button (N), is engaged. With the engine at a normal running temperature of 85°C, the choke valve (automatically) fully open, and the four throttle (butterfly) valves closed, adjust the hexagon head idle screw to give 500 rpm. Adjust the two idle mixture milled head adjusting screws by hand until the engine runs smoothly. Re-check the revolutions and again adjust the idle screw to give 500 rpm.

(6) Push the carburettor adjusting link rearward until lever (F) reaches the stop in the transmission and with the Throttle lever on the carburettor fully back tighten nut (D) securely.

Accelerator Pedal Setting

(1) Engine stationary but at the normal running temperature of approximately 85°C. This ensures that the automatic choke valve is fully open.

(2) Engine stationary but cold. When the engine is cold the choke valve should be held fully open. The reason for these conditions is because the secondary throttle (butterfly) valves cannot begin to open unless the choke valve is fully open, due to an interlocking mechanism. Undue forcing will impair the linkage to the automatic choke. Continue as follows:

(a) Loosen locknut (G) and screw stop (H) fully in.

(b) Depress the accelerator pedal sufficiently to fully vertically open all four throttle (butterfly) valves. Note that the two primary valves on the front of the carburettor open before the two secondary valves. In this fully open position set stop (H) to just contact the back face of the pedal.

(c) Tighten locknut (G) and recheck the setting.

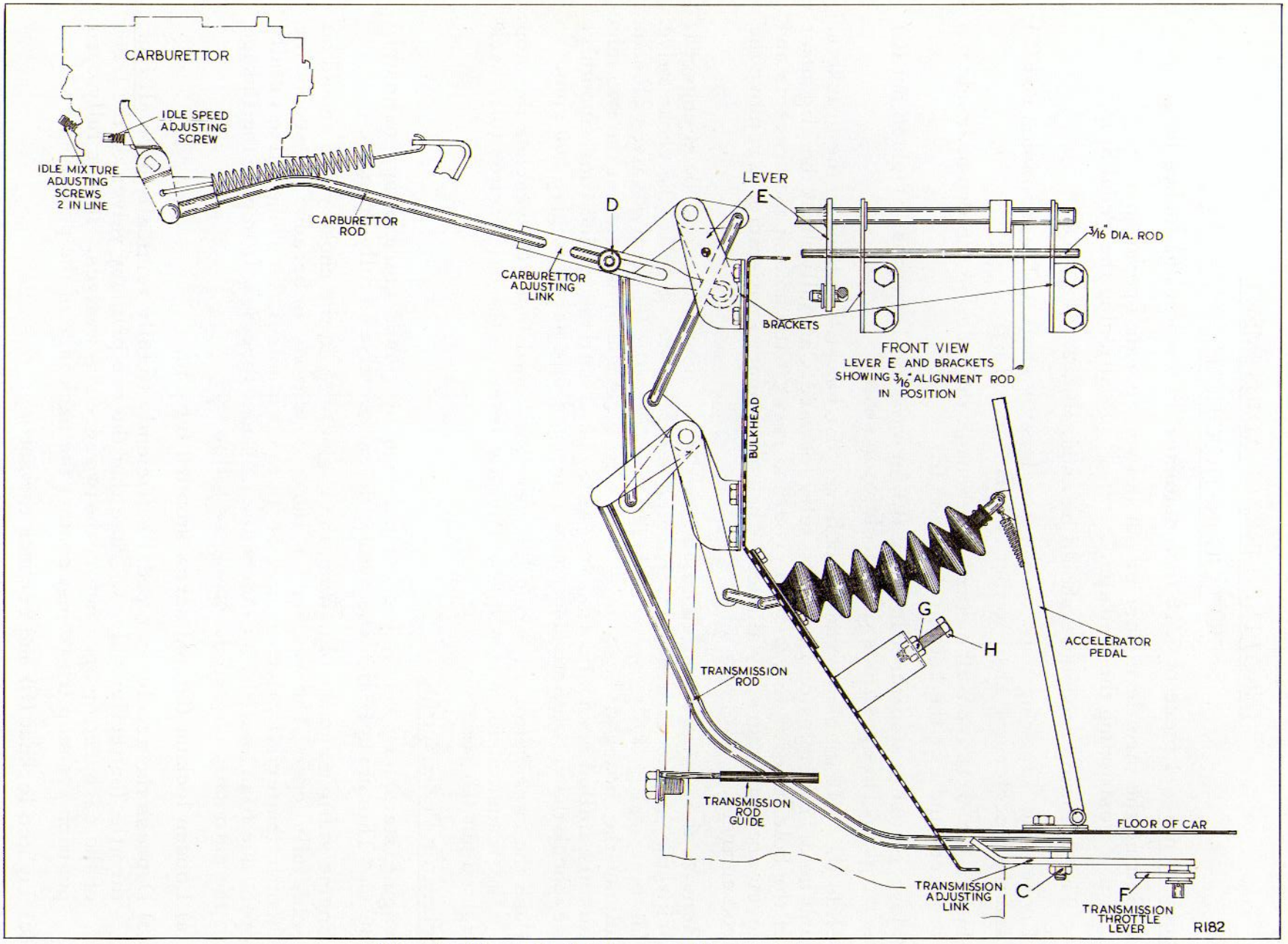

Fig. 2 Throttle Linkage Adjustment

GEARSHIFT CONTROL CABLE ADJUSTMENT

Improper cable adjustment could cause erratic gear changing and reduce the transmission clutch life. In extreme cases it may result in the car moving forward or to the rear with the neutral button (N) pushed in.

To adjust the push button proceed as follows:

(1) Raise the car on a hoist. Have an assistant hold the (R) reverse button firmly pressed in.

(2) See Fig. 3. On the left hand side of the transmission remove the lock screw from the control cable adjustment screw.

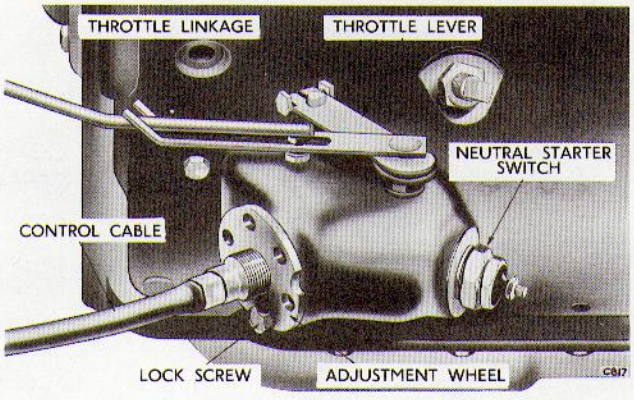

Fig. 3 Gearshift Control Cable Adjustment

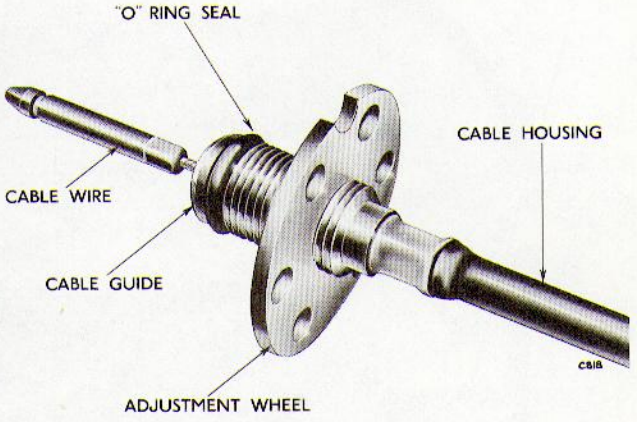

Fig. 4 Gearshift Control Cable and Adjustment Wheel

(3) Turn the adjustment wheel anti-clockwise until two or three threads are showing on the cable guide behind the wheel.

IMPORTANT

Test the adjustment wheel for free turning on the threads. If necessary remove any dirt or burrs and lubricate with a few drops of transmission fluid. Fig. 4.

Do not back the adjusting wheel entirely off the guide threads because it serves as a stop to prevent the 'O' ring seal from going too far into the case and becoming caught.

(4) Holding the cable guide, apply only enough inward force (approximately two to three pounds) to bottom the assembly at the reverse detent, while holding the cable bottomed, rotate the adjusting wheel clockwise until it just contacts the case squarely.

(5) Continue to turn the wheel clockwise just enough to make the next adjustment hole line up with the locking screw hole in the casing.

(6) Counting this hole as number one, continue turning the wheel clockwise until the fifth hole lines up with the screw hole in the casing.

(7) Insert the locking screw and tighten to 40 inch-pounds torque.

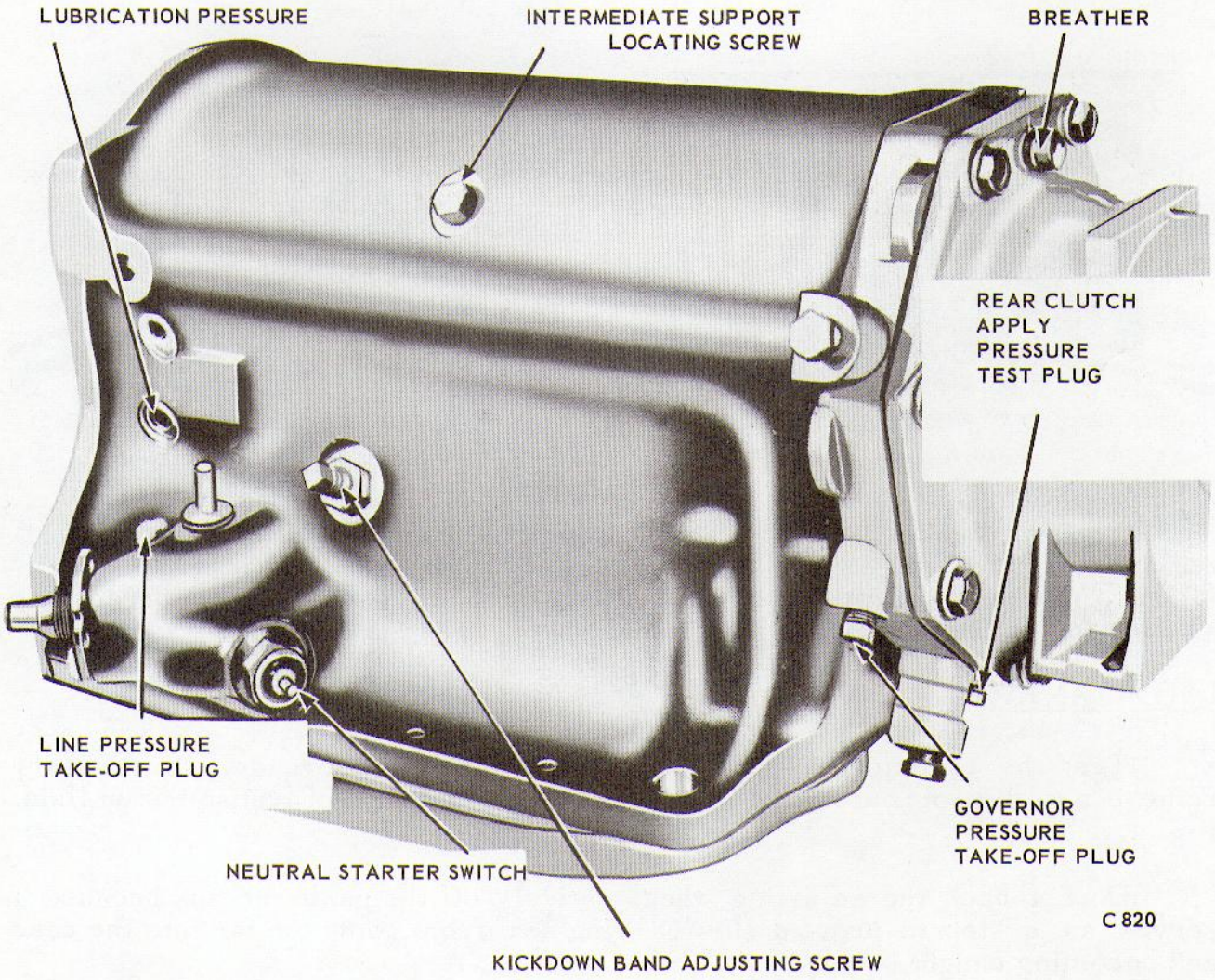

Fig. 5 Transmission Case (Left-side)

PRESSURE CHECKS

Line, Governor, Lubrication, Rear Clutch Apply
and Throttle compensated.

LINE PRESSURE. Check and adjustment

NOTE. Line pressure adjustment must be made in D (drive) position with the engine at 1200 rpm and the road wheels free to turn. Oil must be at normal operating temperature (150° - 200°F)

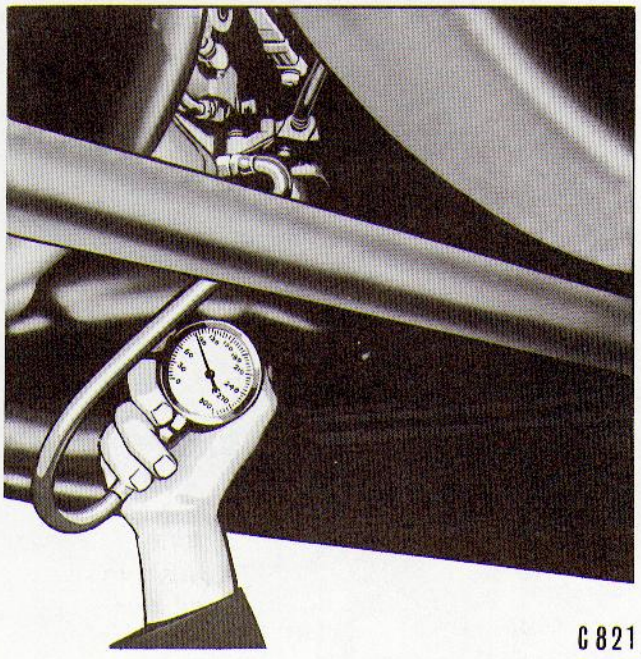

Fig. 6 Checking Line Pressure

Procedure

Jack up the rear of the car and support the rear end of the chassis with chassis stands, so as to allow the road wheels to turn safely and freely.

Referring to Fig. 5, remove the line pressure take off plug, and connect in its place pressure gauge C3293 (300 p.s.i.) Fig. 6.

With an assistant check to the following chart.

Push Button Position	Rear Wheels	Engine Speed r.p.m.	Line Pressure p.s.i.
R.	Free to turn	1600	200 - 240
N.		1200	85 - 95
D. (upshifted to Direct)	Free to turn	1200	89 - 91
2.	Free to turn	1200	85 - 95
1.	Free to turn	120	85 - 95
D.	Free to turn	3500	93 - 100

If line pressure does not fall within the limits specified adjust as follows.

Loosen the locknut on the regulator valve adjusting screw, Fig. 7.

Screw the adjusting screw CLOCKWISE to increase or ANTI-CLOCKWISE to decrease the line pressure. This line pressure adjustment must be made in the D (Drive) position with the engine at 1200 rpm with wheels turning and the transmission upshifted into direct speed.

NOTE:- There is not a great deal of latitude permitting adjustment of line pressure. Care must be taken not to bottom the spring regulating the line pressure therefore the pressures quoted should not be exceeded.

All line pressure adjustments should fall within the limits specified in the table shown for all other push button positions.

If line pressure cannot be satisfactorily adjusted contact the car manufacturers.

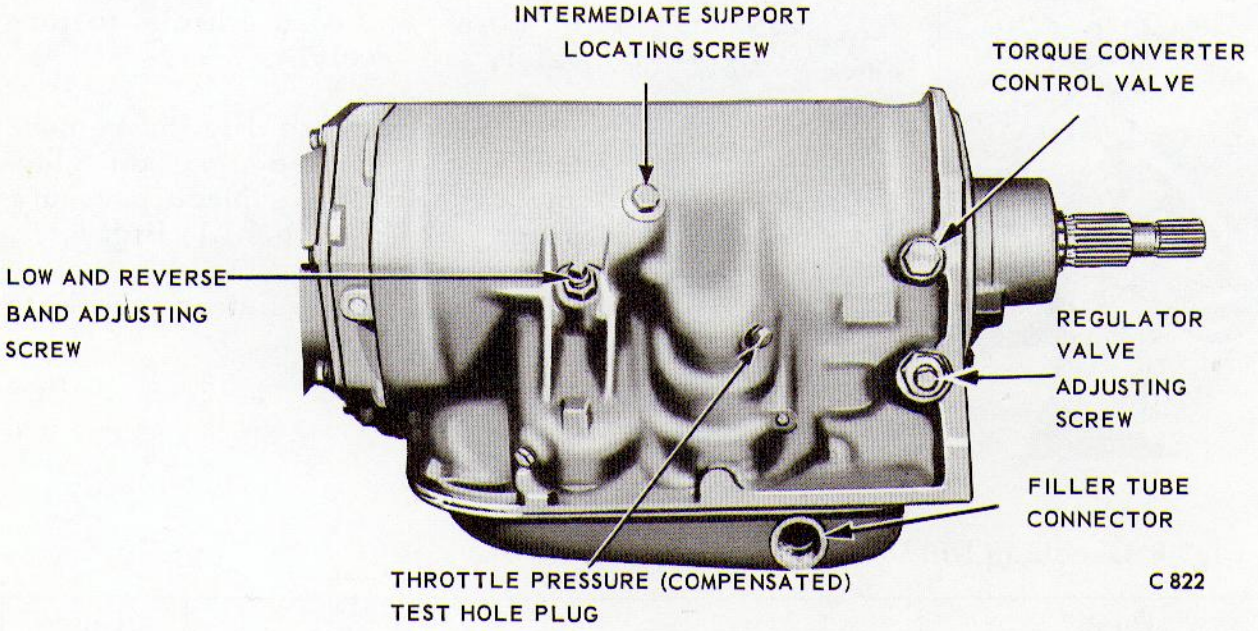

Fig. 7 Transmission Case (Right side)

GOVERNOR

Function

The governor valve assembly transmits a hydraulic pressure to the transmission which is proportional to car speed. This governed pressure in

conjunction with throttle pressure, controls upshift and downshift speeds. The governor is so mounted on the output shaft that when the output shaft rotates, the governor weight assembly exerts a centrifugal force on the governor shaft. The governor shaft transmits this force to the governor valve. Oil is allowed to flow from the line pressure port to the governor pressure port, building up pressure to the governor circuit and against the valve reaction area, sufficient to balance the centrifugal force of the weight.

The greater the vehicle speed, the greater is the centrifugal force of the weights, and hence the greater the governor pressure necessary to balance the centrifugal force. If the vehicle speed decreases, the decrease in centrifugal force allows the valve to move out slightly, venting excess oil and bringing the governor pressure once more into balance at a lower pressure.

The governor weight assembly is constructed so that for vehicle speeds under approximately 25 m.p.h., both weights act as a unit, with the result that small changes in vehicle speed result in comparatively large changes in centrifugal force and governor pressure. Above approximately 25 m.p.h. the primary weight moves outward against the pre-load of the spring and bottoms against the snap ring, leaving only the secondary weight active. Small variations in vehicle speed above approximately 25 m.p.h., therefore, result in smaller variation in governor pressure.

Governor pressure is routed to the governor pressure ports of the reverse blocker valve, shuttle valve, and the 1 - 2, and 2 - 3 shift valve governor plugs.

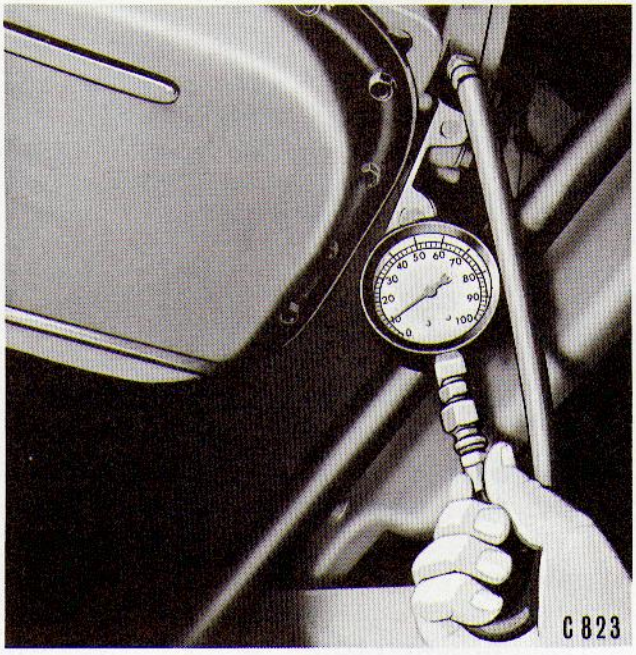

Fig. 8 Checking Governor Pressure

Governor Test Procedure

Jack up the rear of the car and support the rear end of the chassis with chassis stands, so as to allow the road wheels to turn safely and freely.

Remove the plug from the governor pressure take-off hole, situated on the l.h. side of the transmission, immediately in front of the rear extension attachment face. Fig. 5, and instal, in its place, pressure gauge C3292 (100 p.s.i.), Fig. 8.

Operate the transmission and engine according to the following chart.

Push Button Position	Rear Wheels	Engine R.P.M.	Governor Pressure P.S.I.
D	Free to turn	690 - 790	15
D	Free to turn	1250 - 1510	45
D	Free to turn	2560 - 2790	75

The governor pressure should be within the range shown on the chart. The governor pressure should increase smoothly and proportionally to speed increase without jumps or excessive gauge pointer fluctuation. However, change in rate of increase will occur in the range of 33 - 43 p.s.i. governor pressure. This is the governor second stage transition point and is a normal condition.

The governor pressure should also decrease along with speed decreases. If the governor pressure is erratic or does not return to zero when the wheel rotation stops, the governor valve may be sticking due to dirt of foreign matter.

When the rear wheels are not rotating, the governor pressure should be zero.

Freeing the Governor

Remove the transmission dipstick. Place a length of hose over the end of the filler tube and extend it down under the car to a drain pan. Fluid may be forced out from the filler tube if too much air is applied to the governor circuit. Disconnect the governor pressure test gauge hose.

Apply air pressure to the governor circuit through the test connection in very short, sharp blasts. Rotate the propellor shaft between blasts to help free the governor valve. Allow several seconds of time between blasts to allow the transmission to vent and prevent fluid from being forced out from the filler tube. When the governor valve is free, you may be able to hear the valve click as the air pressure is applied.

After the governor valve is free, remove the test gauge fitting and install the plug. Start the engine. Push the 'R' (reverse) button and operate engine at 1600 r.p.m. in reverse for a minute or two. This will cause the flow of fluid to wash away any dirt or foreign matter, that may have caused the governor valve to stick, and was dislodged by the air blasts. Repeat the pressure test.

Remove hose from the filler tube and test gauge fitting from pressure take-off hole. Install plug. Check the fluid level and add fluid if necessary.

NOTE:- If repeated sticking of the governor valve is experienced, it is recommended that the transmission fluid be drained and the torque converter flushed out. Refill the transmission to the proper level with transmission fluid in accordance with the lubricant chart and maintenance instructions.

If the air blasts could not free up the governor valve, the sticking may be due to dimensional interference, in which case the transmission extension housing will have to be removed to service the governor.

LUBRICATION PRESSURE CHECK

Procedure

Remove the oil cooler pipe and fitting from the lubrication pressure hole located on the left side of the transmission case, Fig. 5 and instal in its place, pressure gauge C3292 (100 p.s.i.) and Tee piece.

With the engine running at 800 r.p.m. in neutral (N) lubrication pressure should be approximately 10 - 30 p.s.i.

If the pressure is extremely high (above 50 p.s.i.) remove the torque converter control valve Fig. 7 and inspect for a dirty or sticking valve, or a distorted spring or regulator valve body.

REAR CLUTCH APPLY. Pressure check

Function

The rear clutch locks the gear train for direct drive operation in the forward range and transmits full input torque to the gear train in reverse operation. When making the power upshift from second to direct, the engagement of the clutch and disengagement of the kickdown band is accomplished by application of controlled pressure.

Test Procedure

The rear clutch apply pressure test plug is positioned on the left underside of the output shaft support casing i.e. directly in front of the rear extension attachment face. See Fig. 5.

The rear clutch apply pressure should be checked simultaneously with the line pressure or immediately after line pressure has been determined.

With the rear end of the car supported on 'boxes' allowing the wheels to rotate freely, install gauge tool No.C-3293 (300 p.s.i.) at test plug point. The clutch apply pressure should not be less than 15 p.s.i. lower than line pressure in D (drive) direct position only.

THROTTLE (COMPENSATED) Pressure check

Function

Throttle Valve

The throttle valve assembly transmits a hydraulic pressure to the transmission which is proportional to the amount of throttle opening. The throttle valve lever shaft is rotated in proportion to the amount of throttle opening of the carburettor by a linkage connecting the throttle valve lever shaft to the car's throttle linkage. The throttle valve lever shaft positions the kickdown valve and throttle valve spring in accordance with the amount of carburettor throttle opening, the spring being free (no load) at closed throttle and compressed at wide open throttle. Therefore, the throttle valve spring exerts a force on the throttle valve that increases with carburettor throttle opening.

The throttle valve allows oil to flow from the line pressure port to the throttle pressure port, which is connected by a passage to the reaction area of the throttle valve. Throttle pressure will build up in the throttle pressure circuit and against the reaction area until it reaches a value great enough to balance the force of the throttle valve spring. If throttle pressure builds up too high, the throttle valve will move slightly to a position such that excess oil is allowed to escape through the vent port.

Throttle pressure will vary with the amount of carburettor throttle opening from a value of 0 (zero) pressure at closed throttle to a value of approximately 90 p.s.i. at wide open throttle. Throttle pressure is routed to the following places;

1. Throttle pressure port of the kickdown valve.
2. Throttle pressure port of the throttle compensator valve.
3. Through check valve to throttle pressure port of the shuttle valve plug.
4. To the throttle pressure port of the 2-3 shift valve (spring end).
5. To the throttle pressure port of the 1-2 shift valve (spring end).

Throttle Compensator Valve

The throttle compensator valve amplifies the variations in throttle pressure. Oil flows from the line pressure port of the 1-2 shift valve (in the upshifted position) to the throttle compensator valve pressure port. Throttle compensator pressure is controlled by throttle pressure and spring force acting on end of the valve against a reaction area fed by compensator pressure. Throttle compensator pressure will vary with the amount of carburettor throttle

opening from a value of approximately 10 to 16 p.s.i. at closed throttle to a value of 90 p.s.i. at approximately 3/4 throttle. This arrangement makes it possible to obtain more closely the variations required for the 1-2 and 2-3 shifts. Throttle compensator pressure is routed to the throttle compensator pressure area of the kickdown servo.

Test Procedure

The throttle valve lever is positioned on the left side of the transmission case. See Fig. 3.

The throttle compensator valve test plug hole is on the right hand side of the transmission case. See Fig. 7.

Jack rear of car and support rear end on 'boxes' so as to allow the wheels to turn freely.

Install gauge, Tool C.3292 (100 p.s.i.) at throttle compensated pressure take-off plug.

Disconnect the bell crank to transmission throttle linkage at the transmission.

Start engine and place the transmission in "2" (second) position.

While holding the transmission throttle lever towards the closed throttle position (against the internal stop) increase engine speed slowly (using accelerator pedal or suitable throttle control fixture) to approximately 850 r.p.m. to obtain an upshift into 2nd speed.

After the shift takes place, compensated throttle pressure should read 10 to 16 p.s.i.

Move throttle lever (at transmission) slowly towards full throttle. Compensated throttle pressure should begin to rise after approximately 5 degrees movement of the throttle lever. If compensated throttle pressure rises immediately when the lever is moved, or if the pressure is above 16 p.s.i. but fails to rise after approximately 5 degrees movement, the throttle pressure should be adjusted.

Before stopping the engine, advance the throttle control lever (at transmission) slowly and then return it to closed throttle. Compensated throttle pressure should rise to approximately 80 to 90 p.s.i. and then fall smoothly without hesitation and should always return to a consistent reading at closed throttle. Failure to do this indicates faulty throttle compensated valve or throttle valve operation. The valve body assembly should then be thoroughly cleaned and these steps repeated before continuing with a throttle pressure adjustment.

Adjusting Throttle Pressure

Shut off the engine

Drain transmission and remove oil pan.

Loosen the throttle valve lever stop screw nut and back off the screw approximately 5 turns. (See Fig. 9)

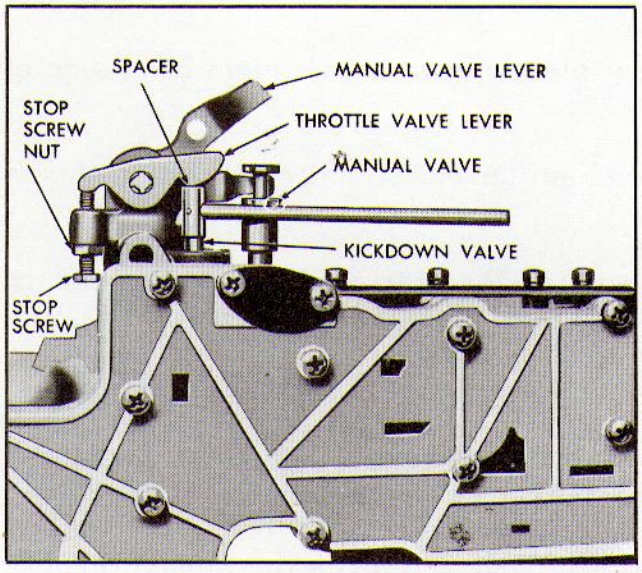

Fig. 9 Throttle Pressure Adjustment

It will be necessary to fabricate a tool to be used as a gauge to reset throttle valve lever stop screw properly. Use a piece of drill rod or other similiar stock approximately 5/16 or $\frac{3}{8}$ inch in diameter. Cut it off very accurately to a length of .646 inch. Insert this gauge between the throttle valve lever tang and the kickdown valve, as shown in Fig. 9.

Push in on the kickdown valve, compressing it against its spring, until it is completely bottomed inside the valve body.

While force is being exerted to hold valve in bottomed position, tighten the throttle lever screw finger tight (do not wrench) to remove all free play of the throttle valve lever. Be sure the adjustment is made with the spring fully compressed and the gauge pin held squarely in line with the kickdown valve.

Before removing tool tighten the throttle valve lever stop screw nut securely.

Re-install oil pan and fill transmission to the proper level.

Repeat throttle compensated pressure check (Step (iv) through (vii)) to insure that difficulty has been corrected.

Re-install throttle linkage and adjust as outlined under Throttle Linkage Adjustements.

KICKDOWN BAND ADJUSTMENT

The kickdown band adjusting screw is located on the left hand side of the transmission case. See Fig. 5.

Procedure

Loosen the locknut and screw it back approximately 5 turns. Check the freeness of the adjusting screw in the transmission case and using the Chrysler torque wrench tool C-3380 and Adaptor C-3705, and using a standard socket, tighten the adjusting screw to give a reading of 47 to 50 inch-pounds on the torque wrench. See Fig. 10.

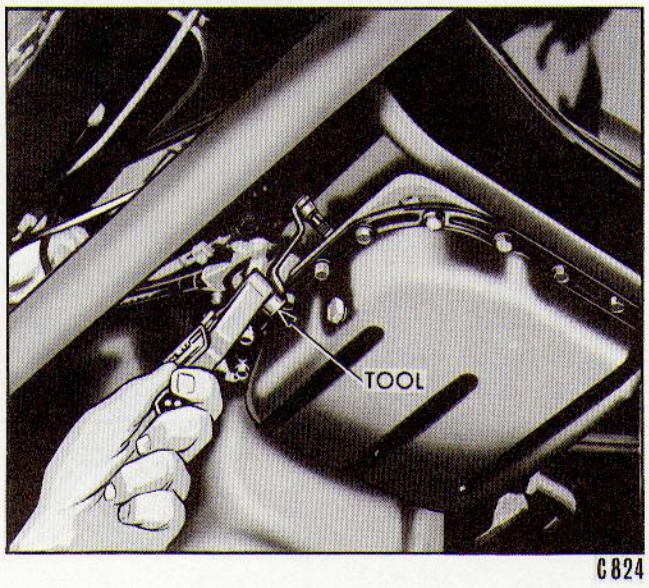

Fig. 10 Adjusting Kickdown Band

Note: This will be a true torque of 70-75 inch-pounds which reading should be used if the torque wrench C-3380 is used without the adaptor, as may be done if adjustment is made with the transmission removed from the car.

Back off the adjusting screw exactly $2\frac{1}{2}$ turns, then lock the adjusting screw in position by tightening the locknut.

LOW AND REVERSE BAND ADJUSTMENT

The low and reverse band adjusting screw is located on the right hand side of the transmission case. See Fig. 7.

The adjustment procedure is the same as for the kickdown band except that adaptor C-3790 (using a standard socket) is used with the torque wrench C-3380.

ENGINE IDLE

Referring to Fig. 2 and to the instructions given in paragraph (5) of the setting instructions adjust the engine idling speed to 500 rpm.

NEUTRAL STARTING SWITCH

The neutral starting switch is provided to ensure that the engine starter motor can be engaged only when the 'N' neutral button is depressed.

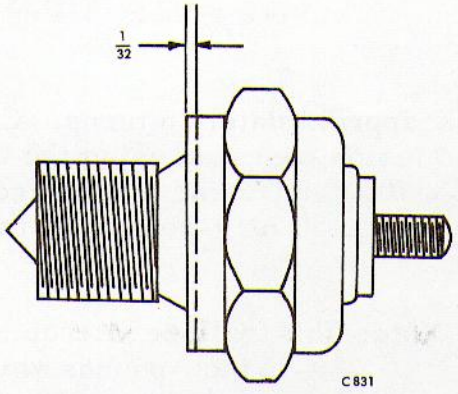

Fig. 11 Neutral Starting Switch and Seal

The switch is positioned on the left hand side of the transmission. See Fig. 3.

To remove the switch, drain approximately 3 quarts of fluid from the transmission by disconnecting the filler tube from the transmission sump. Disconnect the wire at the switch and unscrew and remove the switch, Fig. 11.

Installation and Tests

Looking into the hole from which the switch has been removed a lever will be noted. This lever should move across the dead centre of the hole as earthing of the circuit is completed through the contacting plunger of the switch and the lever. In instances where the lever is not aligned centrally, Fig. 12, it is recommended that the lever be bent with a screwdriver, or other suitable tool to the central location. Using test leads, with a light interposed, connected to the battery and terminal of the switch, operate the plunger of the switch and see that it is contacting and functioning correctly.

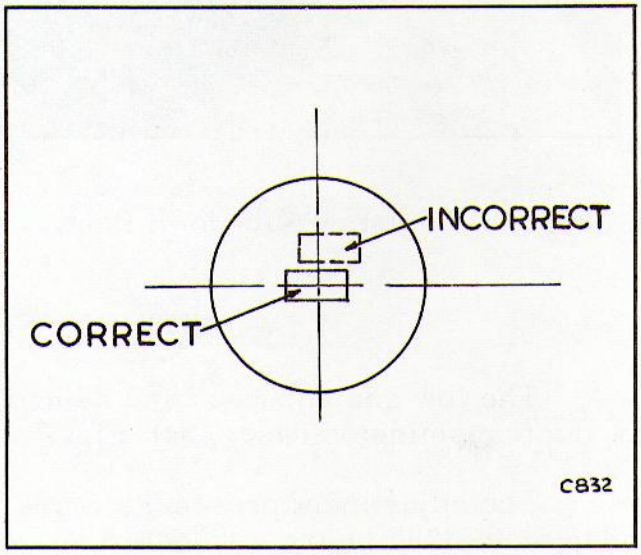

Fig. 12 Lever Alignment

Next position the concave spring (cupped) washer over the threads of the neutral starting switch so that the concave (cupped side of the washer) is towards the transmission case. Fit the 'O' ring seal over the threads and up against the washer.

With the cable adjustment already determined and assured and with (N) neutral button depressed, fit test leads, incorporating a light, to the battery current and to the terminal of the switch. Clean the contact faces of the case

and switch and screw the switch into the case until the test light lights, then screw in switch an additional 1/3 to 1/2 turn.

Should the test light fail to light then it can be assumed that the plunger of the switch is not in contact with the lever in the transmission in which case the switch should be removed and 1/32 inch machined off of the seating surface of the switch as shown in Fig. 13.

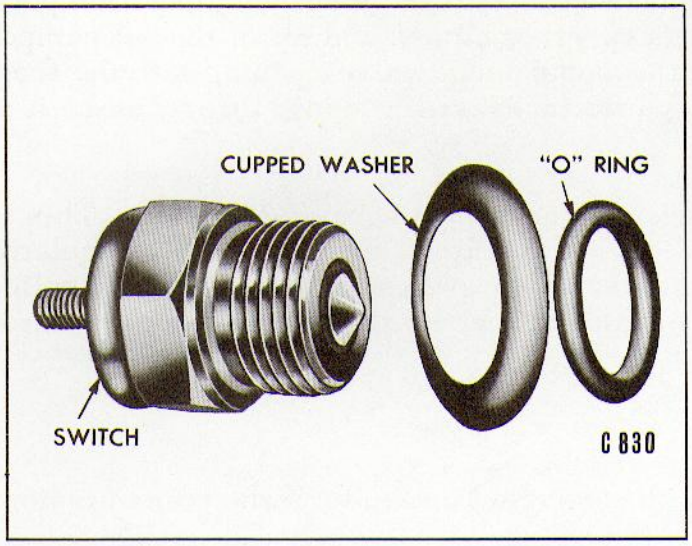

Fig. 13 Neutral Starting Switch

After this operation clean the switch, replace the cupped washer and 'O' seal ring and reconnect the test leads to the battery current and the terminal of the switch. Tighten the switch until the test light just lights, then tighten another 1/3 to 1/2 turn.

Note: The switch must be tight enough to prevent oil leakage. If it is not, add a thin washer and re-tighten.

Remove the test leads and reconnect the correct lead to the terminal of the switch. With the transmission filler tube repositioned and tightened, refill with fluid as directed in FLUID LEVEL. Check starter operation by pushing the various buttons and returning to neutral.

REGULATOR VALVE

Function

The regulator valve controls the line pressure at a value of approximately 90 p.s.i. for all operating conditions except reverse. Line pressure, which is supplied by the front pump (at car speeds of under 35 m.p.h.), is routed directly to a primary reaction area on the regulator valve body. For all conditions except reverse, line pressure is also routed through the valve body to the secondary reaction area. A line pressure of 90 p.s.i. (acting on the two reaction areas) is sufficient to overcome the force of the regulator valve spring and move the valve to a position that will allow oil to flow through a restricting hole in the regulator valve body to the torque converter.

If the oil flow from the front pump exceeds the amount necessary to feed

the torque converter and transmission, line pressure will rise slightly, causing the regulator valve to move to a new position where excess oil from the front pump pressure port is allowed to dump into the front pump suction port.

Above the car speed of approximately 35 m.p.h., the rear pump furnishes the oil needed by the torque converter and transmission at a line pressure of approximately 90 p.s.i. When this condition is reached, the pressure increases slightly and the regulator valve moves over to a new position where the excess flow is dumped from the line pressure port into the front pump suction port. Under this condition the front pump check valve closes and all of the oil pumped from the front pump is dumped back through a large valve opening into the front pump suction port. Thus the front pump turns with reduced effort, since it is operating at a low pressure.

For reverse operation, oil must be at a pressure of 225 p.s.i. This is accomplished by shutting off the source of line pressure to the regulator secondary reaction area, with the result that a line pressure of 225 p.s.i., applied to the primary reaction area, is required to overcome the force of the regulator valve spring.

Faulty Valve or Spring

The regulator valve is situated on the right hand side of the transmission case, See Fig. 7.

To remove the valve, unscrew the complete plug, with its adjusting screw as shown in Fig. 14 and take out all the parts as shown in Fig. 15.

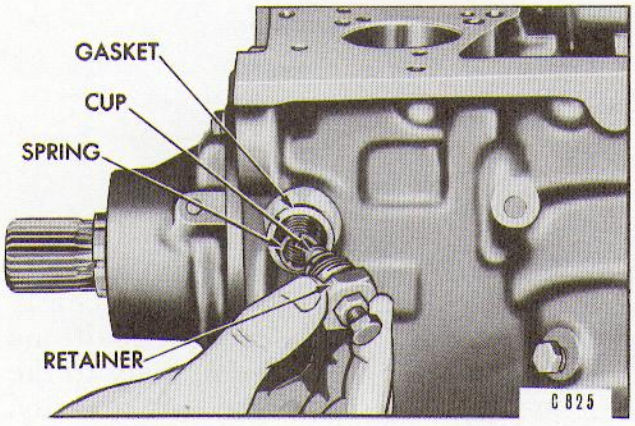

Fig. 14 Removal and Installation of Regulator Valve Retainer

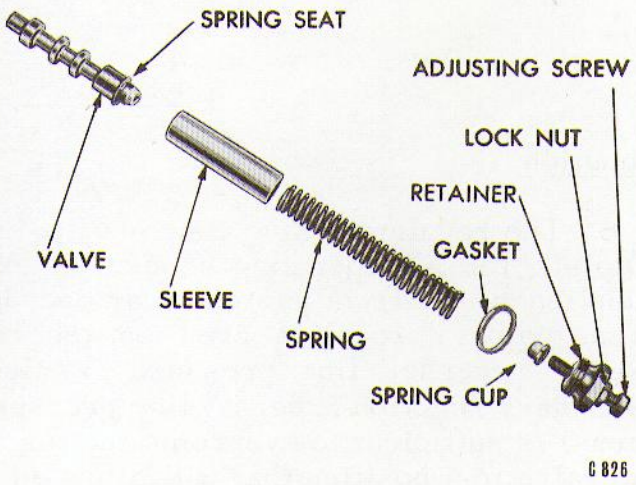

Fig. 15 Regulator Valve Details

The valve can be removed by using a length of 5/32 inch dia. welding rod inserted into the end of the valve, Fig. 16.

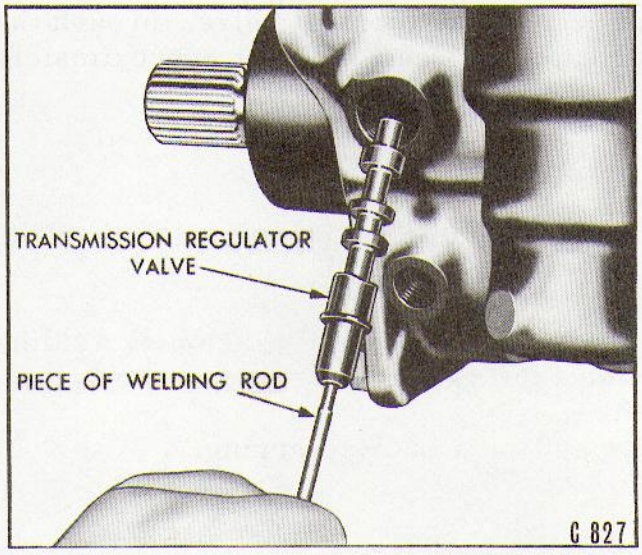

Fig. 16 Removing Regulator Valve

Clean valve with solvent and dry with compressed air. Valve should move freely in the valve body. Crocus cloth may be used to polish the valve, providing care is exercised not to round off the sharp edge portion of the valve. The sharp edge portion is vitally important to this type of valve, since it helps to prevent dirt and foreign matter from getting between the valve and body, thus reducing the possibility of sticking.

Check the regulator valve spring for distortion. Check regulator valve snap ring. Check adjusting screw and locknut in retainer for freeness and pulled threads.

After the valve and spring etc., have been thoroughly cleaned, it is important that they be protected from dirt and dust until ready for installation.

Refitting the valve

Using a length of 5/32 inch dia. welding rod, fit the valve into position and seating properly into the casing. Fit the remainder of the parts as shown in Fig. 15 and tighten the plug to 50 ft.lb. torque. Tighten the locknut of the adjusting screw if it has been loosened.

Check the line pressure as given in the procedure in this book and adjust if necessary.

TORQUE CONVERTER CONTROL VALVE

Function

This valve maintains an oil pressure of approximately 30 p.s.i. within the converter. Oil is fed from the regulator valve through a restricting hole in the regulator valve body to the torque converter. The oil flows through the torque converter and returns to the regulator valve body, where the converter pressure is regulated by the torque converter control valve. When the torque converter pressure rises to 30 p.s.i., the control valve will move against the spring load

and allow oil to flow through the cooler in the radiator bottom tank and then back to the lubrication circuit. Torque converter pressure acts on the valve's reaction area such that if it exceeds 60 p.s.i. the valve is moved further against the spring load, permitting excess oil from the converter to by-pass into the oil pan. Oil is routed through the torque converter control valve, through the transmission lubrication system to lubricate the gear train at approximately 10 - 30 p.s.i. pressure.

Faulty valve or spring

The torque converter control valve is situated on the right hand side of the transmission case. See Fig. 7.

Remove the plug, gaskets and spring and using a length of $\frac{1}{8}$ inch dia. welding rod inserted into the end of the valve, remove the valve.

Check for a stuck or scratched valve and/or a buckled spring.

Refitting the Valve

Again using a length of $\frac{1}{8}$ inch dia. welding rod, fit the valve into position and seating properly in the valve body. Fit the spring and the plug, with its gasket and tighten to 40 lb.ft. torque.

BREATHER

The breather is positioned mid-way between the two top attachment holes of the rear extension. See Fig. 5.

The purpose of the breather is to facilitate filling and draining. It also releases fumes and air pressure build-up caused by expansion of oil due to heat.

Inspect the vent (drive-in type) to make sure that it is open and free from dirt and underseal.

Torque Converter Cooling Insufficient

When the torque converter pressure rises to 30 p.s.i., the torque converter control valve allows the oil to flow through an external pipe to the oil cooler*, positioned in the bottom tank of the radiator, where it loses some of its heat to the engine cooling water, and then back to the transmission via an external pipe to the lubrication circuit.

* Should the cooler leak, engine coolant may become mixed with the transmission fluid. Transmission fluid may also enter the cooling system. Both the cooling system and transmission should be checked in case of a suspected cooler leak.

Should the converter cooling be insufficient, check the following points:-

(1) Inspect oil cooler lines for being bent, kinked or having loose connections.

(2) Check lubrication pressure as described.

If neither of these points is at fault, the trouble might be due to scale deposits in the radiator, reducing the cooling efficiency, in which case the engine might also be showing signs of overheating.

Flush radiator as follows:

(1) Drain cooling system and remove hoses from engine.

(2) Install flushing gun in radiator outlet bottom.

(3) Fill radiator and turn on air in short blasts. Do not apply more than 15 p.s.i. pressure when flushing radiator, as damage to radiator may result.

(4) Continue procedure until water runs clean.

(5) Refit hoses and refill cooling system.

(6) Check for leaks.

(If flushing gun is not available, use an approved proprietary radiator cleaner in accordance with Manufacturer's instructions).

REMOVE THE TRANSMISSION SUMP AND OIL STRAINER

Draining Transmission

For transmission draining instructions see Fluid Level.

Oil Pan - Removal

Remove the eighteen oil pan screws together with their washers and remove the oil pan and gaskets from the transmission case, Fig. 17.

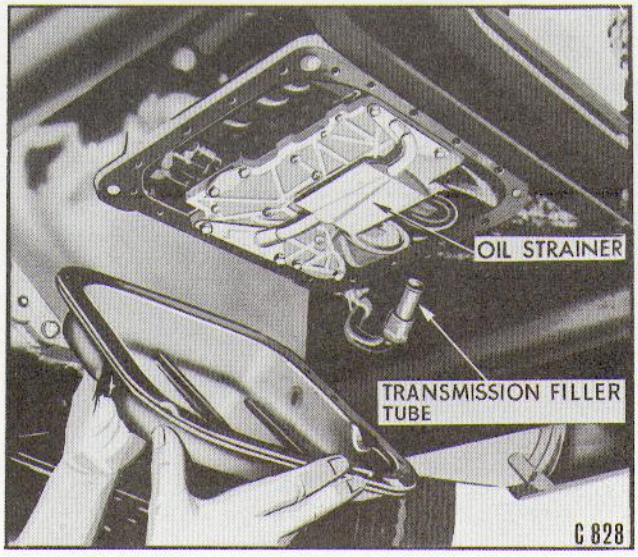

Fig. 17 Removal and Installation of Oil Pan

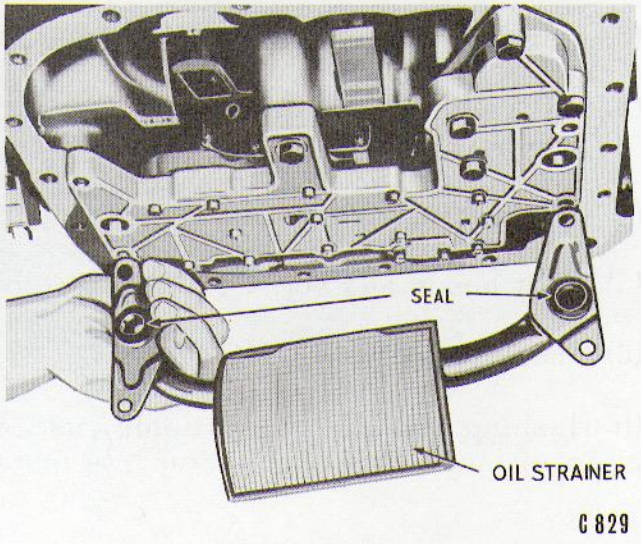

Fig. 18 Oil Strainer Removal

Oil Strainer Removal

Remove the four oil strainer bolts and lockwashers and remove the assembly as shown in Fig. 18.

Note:- At this stage it is recommended that the press button positions are examined inside the transmission. With an assistant pressing the buttons and using a light beneath and towards the front of the transmission, see that the spring loaded ball locates positively into the detents of the manual valve lever. If it is not positive and satisfactory then adjustments should be made in accordance with Gearshift Control Cable Adjustment, Page 9.

Thoroughly wash the oil strainer and oil pan and dry them.

Refitting the Oil Strainer

The sealing rubbers on the ends of the strainer tubes are normally used again, but if in doubt they should be replaced.

Refit the four oil strainer bolts and lockwashers and tighten evenly to 14-16 ft/lb. torque.

Refitting the Oil Pan

Use a new gasket, refit the eighteen oil pan screws together with their washers and tighten progressively and evenly, finally tightening to 12-17 ft/lbs. torque.

Do not overtighten as this may well distort the flange of the oil pan which will cause a leak.

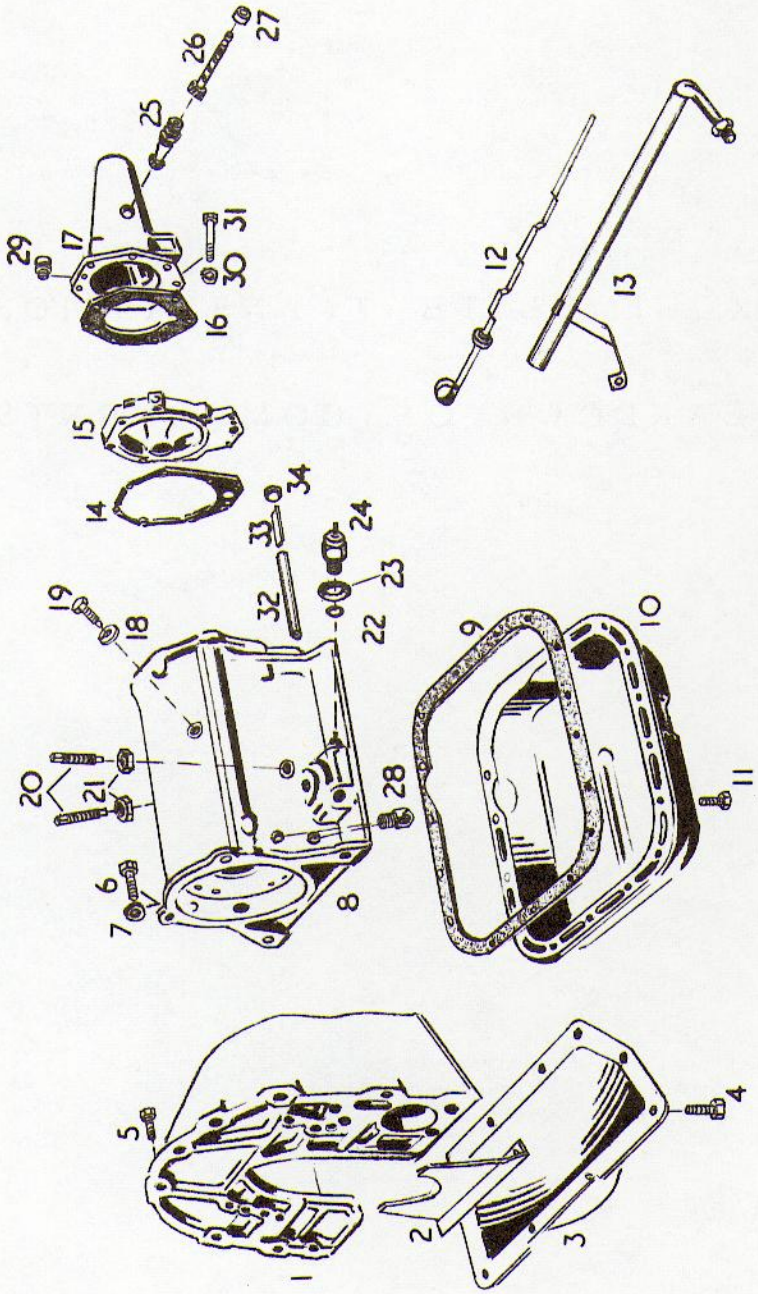
1
2
3
4
5
6
7
8
9
10
11
12
13
14
15
16
17
18
19
20
21
22
23
24
25
26
27
28
29
30
31
32
33
34

TRANSMISSION (1). CASINGS AND OIL PAN

Part No.	Item	Description	No. off per car
1824334	1	Housing - T/Convertor	1
1854314	2	Cover - T/C Housing	1
1853736	3	Pan - T/C Housing	1
1630750	4	Screw and Washer - Pan to Housing	10
6012030	5	Screw and Washer - T/C Housing to Cylinder Block	5
1854523	-	Screw and Washer - T/C Housing to Cylinder Block	1
1672596	-	Screw and Washer - T/C Housing to Cylinder Block	1
180149	6	Bolt - Trans. Case to T/C Housing	4
103322	7	Spring Washer - Trans. Case to T/C Housing	4
1941628	8	Transmission Case	1
1636448	9	Gasket - Trans. Oil Pan	1
1636286	10	Trans. Pan Assy.	1
180075	11	Screw - Oil Pan Attaching	18
407-1-35026	12	Indicator (Dipstick) Oil Pan Level	1
407-1-35025	13	Tube and Bracket - Oil Pan Filler	1
1853888	14	Gasket - Ouput Shaft Support	1
1853769	15	Support Assy. - Output Shaft	1
1853891	16	Gasket - Trans. Extension	1
407-1-35062	17	Trans. Extension	1
103321	18	Spring Washer	3
1636418	19	Screw - Intermediate Support	3
1736215	20	Screw - Band Adjusting	2
120371	21	Nut - Band Adjusting Screw	2
1316849	22	'O' Ring - Neutral Starter Switch	1
1704482	23	Washer - Neutral Starter Switch	1
1704283	24	Switch Assy. - Neutral Starter	1
1636411	25	Speedometer Drive Pinion Assy.	1
1636406	26	Pinion 17 teeth	1
1559341	27	Retainer - Speedo Pinion	1
116341	28	Elbow - Trans. Oil Cooler Tube	2
1630746	29	Breather	1
120382	30	Spring Washer	7
179847	31	Bolt - Trans. Extension to case	7
1638565	32	Shaft - Servo Lever	1
1636446	33	Spacer - Servo Lever Shaft	1
-	34	Plug - Servo Lever Shaft	1

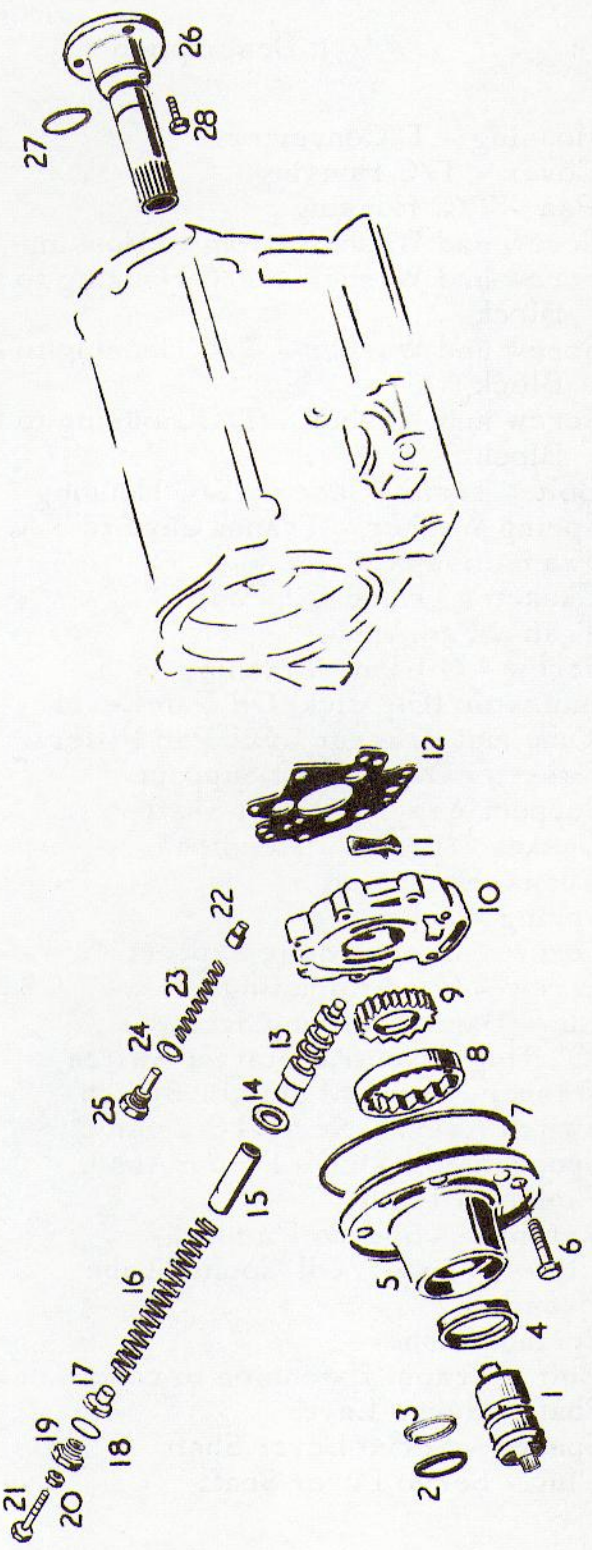
1
2
3
4
5
6
7
8
9
10
11
12
13
14
15
16
17
18
19
20
21
22
23
24
25
26
27
28

TRANSMISSION (2) FRONT OIL PUMP. REGULATOR VALVE. REACTION SHAFT.

Part No.	Item	Description	No. off per car
1949601	1	Sleeve - Front Oil Pump Drive	1
1738264	2	Seal - Rubber - Front Oil Pump Drive Sleeve	1
1854304	3	Seal Ring - Iron - Front Oil Pump Drive Sleeve	1
1738263	4	Seal - Trans. T/C Impellor Hub	1
2084319	5	Front Oil Pump Housing & Rotor - Package	1
180087	6	Bolt - Short - Front Oil Pump Housing	4
1408245	7	Seal - Front Oil Pump Housing	1
1736163	8	Rotor - Front Oil Pump - Outer	1
1949600	9	Rotor - Front Oil Pump - Inner	1
1636311	10	Regulator Valve Body	1
1636396	11	Valve - Front & Rear Oil Pump Check	2
1636303	12	Gasket - Reg. Valve Body	1
1672359	13	Regulator Valve	1
1672362	14	Seat - Reg. Valve Spring	1
1672361	15	Sleeve - Reg. Valve Spring	1
1854319	16	Spring - Reg. Valve	1
1672363	17	Cup - Reg. Valve Spring	1
1117819	18	Gasket - Reg. Valve Spring Retainer	1
1672364	19	Retainer Assy. - Reg. Valve Spr.	1
	20	Locknut - Reg. Valve Spring Adj.	1
1672365	21	Screw - Reg. Valve Spring Adj.	1
2124247	22	Valve - T/Conv. Control	1
1630812	23	Spring - T/Conv. Control Valve	1
1408375	24	Gasket - T/Conv. Control Valve Retainer	1
1941779	25	Retainer - T/Conv. Control Valve Spring	1
1853594	26	Shaft - T/Conv. Reaction	1
1824553	27	Seal Ring - T/Conv. Reaction Shaft	1
271062	28	Screw & Washer - Case to Reaction Shaft	3

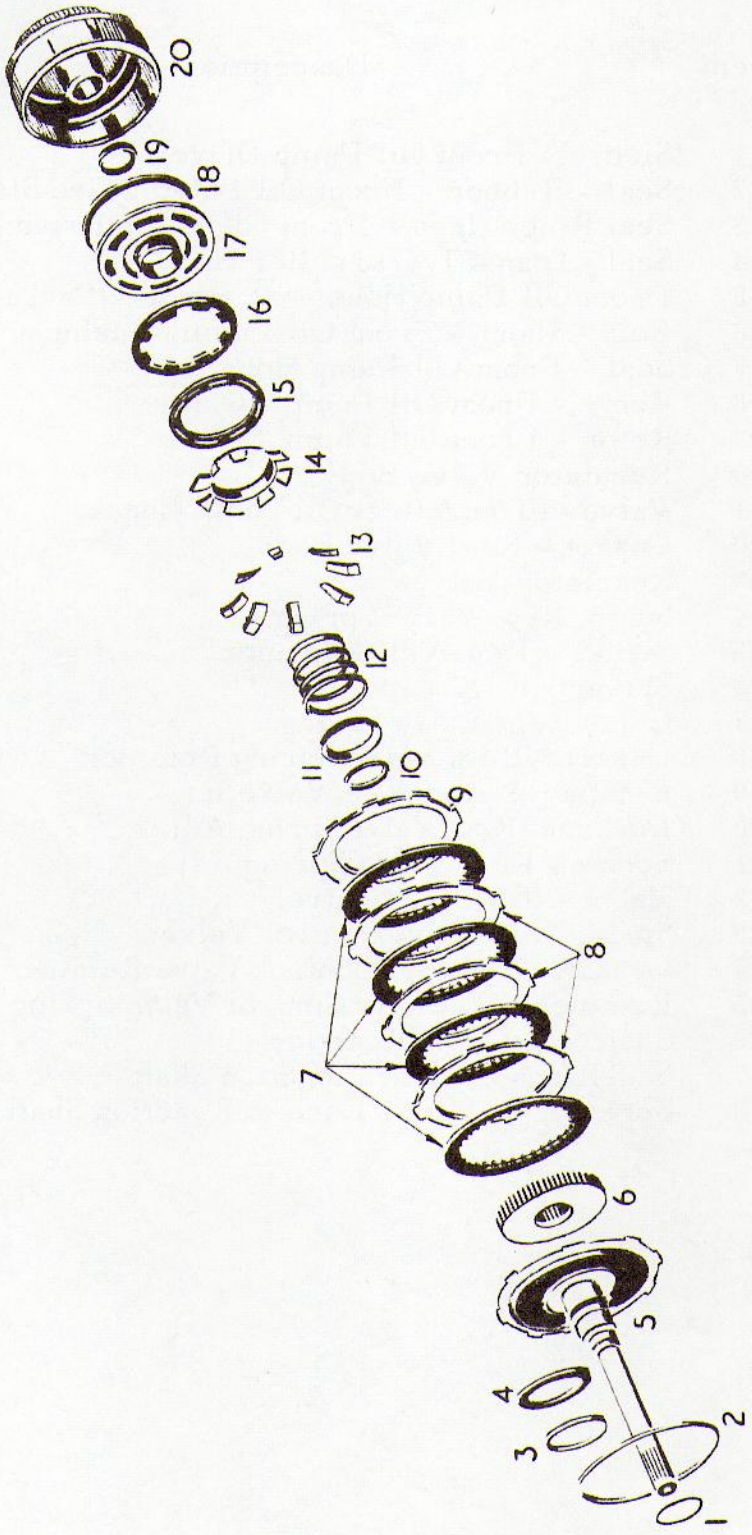
1
2
3
4
5
6
7
8
9
10
11
12
13
14
15
16
17
18
19
20

TRANSMISSION (3) INPUT SHAFT. FRONT CLUTCH.

Part No.	Item	Description	No. off per car
1941831	1	Seal Ring - Small - Input Shaft	1
1636315	2	Snap Ring - Thin - Front Clutch	as reqd
1636316	-	Snap Ring - Med. - Front Clutch	as reqd
1636317	-	Snap Ring - Thick - Front Clutch	as reqd
1323593	3	Seal Ring - Large - Input Shaft	1
1823872	4	Thrust Washer - Thin - Input Shaft	as reqd
1638671	-	Thrust Washer - Med. - Input Shaft	as reqd
1638670	-	Thrust Washer - Thick - Input Shaft	as reqd
1853673	5	Input Shaft	1
1853859	6	Hub - Front Clutch Driving Disc	1
1949196	7	Disc Assy - Front Clutch - .060 - .063	as reqd
1949197	-	Disc Assy - Front Clutch - .073 - .076	as reqd
1949198	-	Disc Assy - Front Clutch - .087 - .090	as reqd
1636262	8	Plate - Front Clutch	3
2124991	9	Plate - Front Clutch Pressure	1
1636356	10	Snap Ring - Front Clutch Piston Spring	1
1619392	11	Retainer - Front Clutch Piston Spring	1
1636365	12	Spring - Front Clutch Piston	1
1853860	13	Lever - Front Clutch Piston	8
1949381	14	Retainer - Front Clutch Piston Lever	1
1823729	15	Washer - Front Clutch Cushion Spring	1
1823731	16	Spring - Front Clutch Cushion	1
1853858	17	Piston - Front Clutch	1
1824549	18	Seal - Outer - Front Clutch Piston	1
1824551	19	Seal - Inner - Front Clutch Piston	1
1853923	20	Retainer Assy - Front Clutch Piston	1

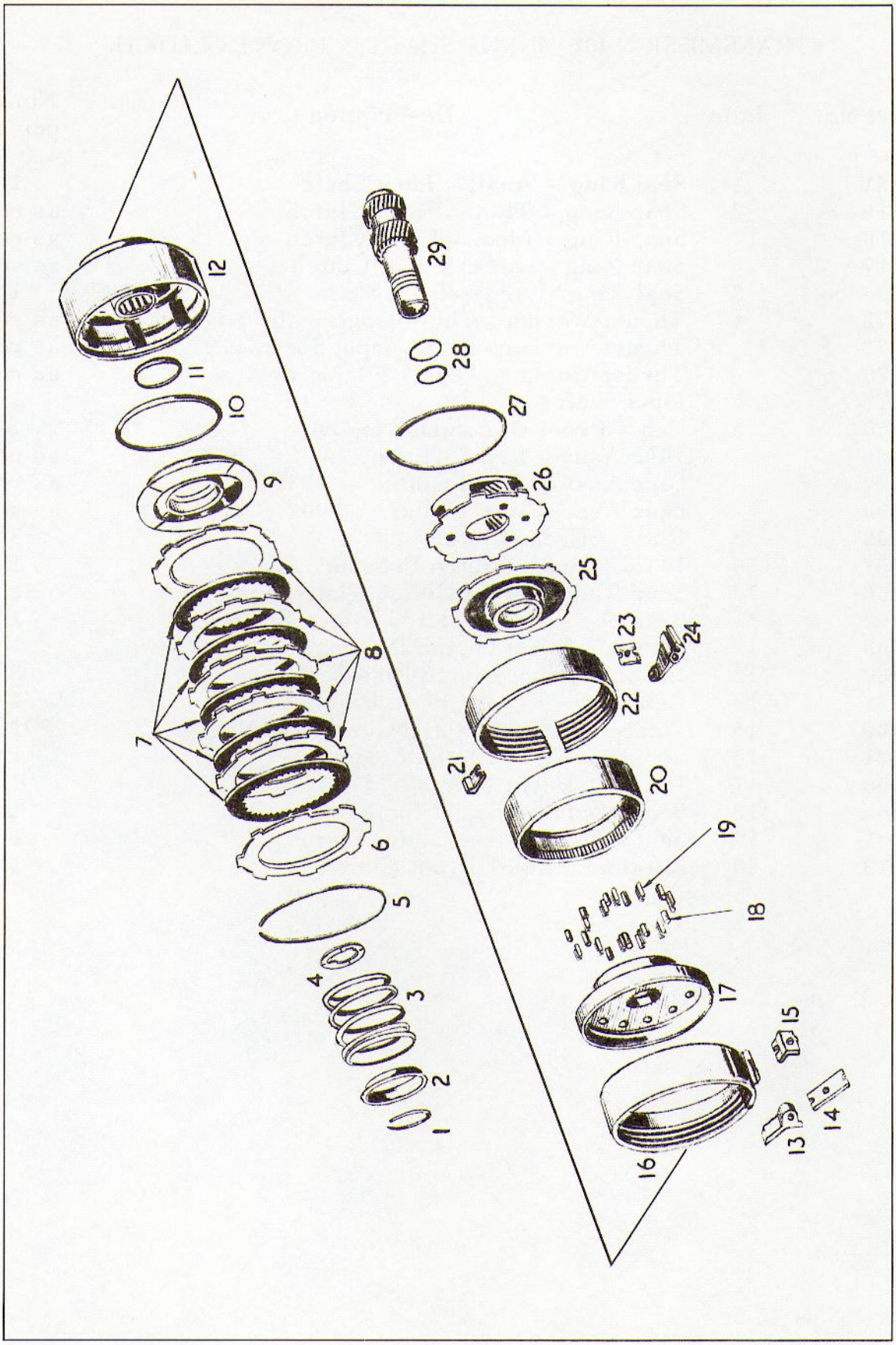
1
2
3
4
5
6
7
8
9
10
11
12
13
14
15
16
17
18
19
20
21
22
23
24
25
26
27
28
29

TRANSMISSION (4) REAR CLUTCH. OVERRUNNING CLUTCH.

Part No.	Item	Description	No. off per car
1636326	1	Snap Ring - Rear Clutch Piston Spring	1
1636289	2	Retainer - Rear Clutch Piston Spring	1
1636364	3	Spring - Rear Clutch Piston	1
1636290	4	Thrust Washer	1
1636316	5	Snap Ring - Rear Clutch	1
2124991	6	Plate - Rear Clutch Pressure	1
1732116	7	Disc Assy. - Rear Clutch	5
1636262	8	Plate - Rear Clutch	5
1736333	9	Piston - Rear Clutch	1
1824550	10	Seal - Outer - Rear Clutch Piston	1
1824552	11	Seal - Inner - Rear Clutch Piston	1
2204758	12	Retainer Assy. - Rear Clutch Piston	1
1949655	13	Lever - Kickdown Band	1
1630896	14	Strut - Kickdown Band	1
1736427	15	Anchor - Kickdown Band	1
1636362	16	Kickdown Band Assy.	1
1636281	17	Intermediate Support and Cam Assy.	1
1619370	18	Roller - Over Running Clutch	10
1539546	19	Spring - Over Running Clutch Roller	10
1736187	20	Drum - Low and Reverse	1
1736427	21	Anchor - Low and Reverse Band	1
1636367	22	Low and Reverse Band Assy.	1
1736423	23	Strut - Low and Reverse Band	1
1736519	24	Lever - Low and Reverse Band	1
1736207	25	Hub Assy. - Over Running Clutch	1
2125070	26	Carrier - Low and Reverse	1
1636315	27	Snap Ring - Thin	as reqd
1636316	-	Snap Ring - Med.	as reqd
1636317	-	Snap Ring - Thick	as reqd
1636469	28	Seal - Reverse Sun Gear	2
1636307	29	Gear - Reverse Sun	1

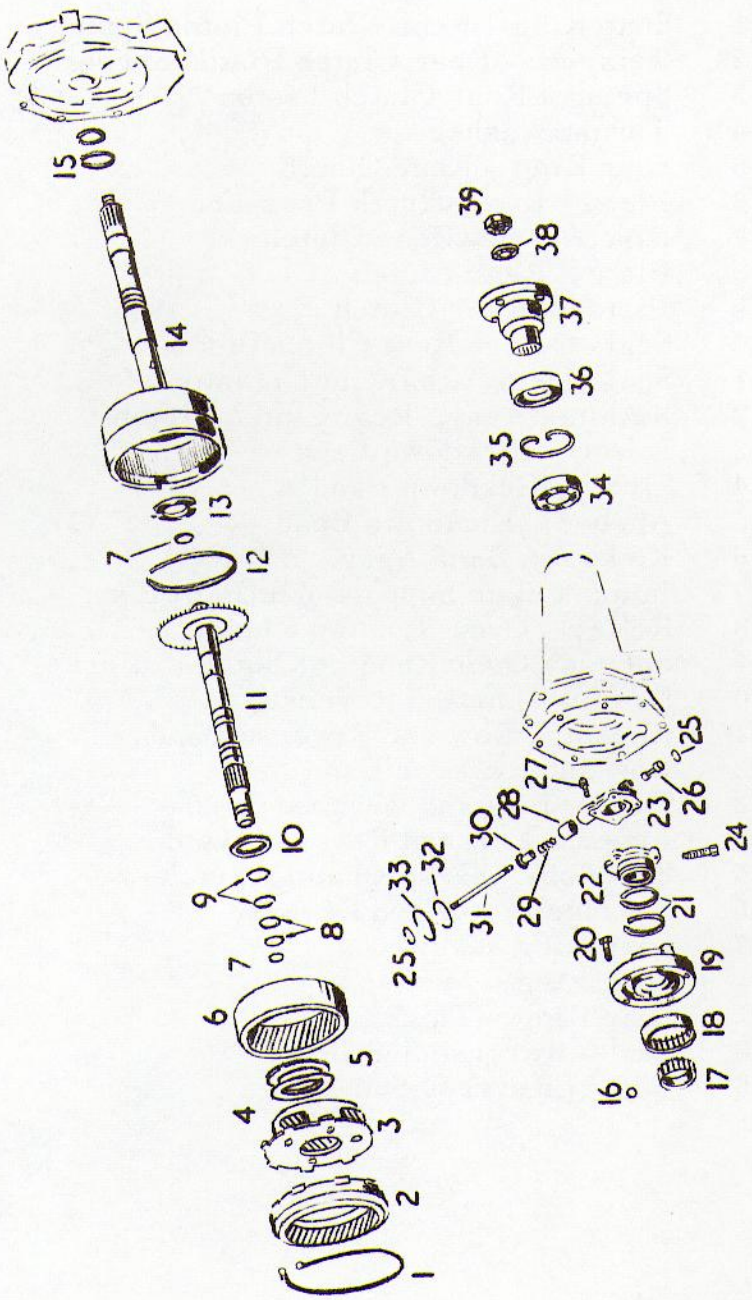
15
14
13
7
12
11
10
9
8
6
7
5
4
3
2
1
39
38
37
36
35
34
33
32
31
30
29
28
27
26
25
24
23
22
21
20
19
18
17
16
25

TRANSMISSION (5) OUTPUT SHAFT. REAR OIL PUMP. GOVERNOR.

Part No.	Item	Description	No. off per car
1636319	1	Snap Ring. Output Drive Shaft Housing	1
1736193	2	Gear - Reverse Annulus	1
2125070	3	Carrier Assy - Kickdown Planet	1
1638667	4	Thrust Plate - Planet Carrier	1
1636376	5	Thrust Washer - K/Down Planet Carrier	1
1636264	6	Gear - Kickdown Annulus	1
1636324	7	Seal Ring - Intermediate Shaft - Front & Rear - Small	2
1672287	8	Seal Ring - Intermediate Shaft - Large	2
1824541	9	Seal Ring - Intermediate Shaft - Large	2
1636314	10	Thrust Washer - Reverse Sun Gear - Rear	1
1636468	11	Intermediate Shaft Assy.	1
1636357	12	Snap Ring - K/Down Annulus Gear	as reqd
1636358	-	Snap Ring - K/Down Annulus Gear	as reqd
1636290	13	Thrust Washer - Output Shaft	1
407-1-35061	14	Output Shaft Assy.	1
1736376	15	Seal Ring - Output Shaft - Small	1
1314249	-	Seal Ring - Output Shaft - Large	1
147483	16	Ball - Rear Oil Pump Pinion	1
1327576	17	Pinion - Rear Oil Pump	1
1672315	18	Gear - Rear Oil Pump	1
1823667	19	Housing Assy. - Rear Oil Pump	1
180081	20	Bolt - Rear Oil Pump Housing	5
1636470	21	Seal Ring - Governor Support	2
2084602	22	Governor Support) Repair	1
	23	Governor body) Package	1
1736468	24	Screw - Governor Locating	1
1638461	25	Snap Ring - Governor Valve Shaft	2
1736424	26	Valve - Governor	1
1823543	27	Screw and Washer	4
1636461	28	Weight - Outer - Governor	1
1949858	29	Spring - Governor Weight	1
1636462	30	Weight - Inner Governor	1
1556082	31	Shaft - Governor Valve	1
1636465	32	Snap Ring - Outer Weight	1
1636464	33	Snap Ring - Inner Weight	1
1672194	34	Bearing - Output Shaft	1
1736432	35	Snap Ring) Selective	1
1736463	-	Snap Ring)	1
1671763	36	Seal Assy. Output Shaft	1
407-1-35063	37	Flange - Output Shaft	1
103346	38	Washer - Output Shaft Flange	1
1824309	39	Nut - Output Shaft Flange	1

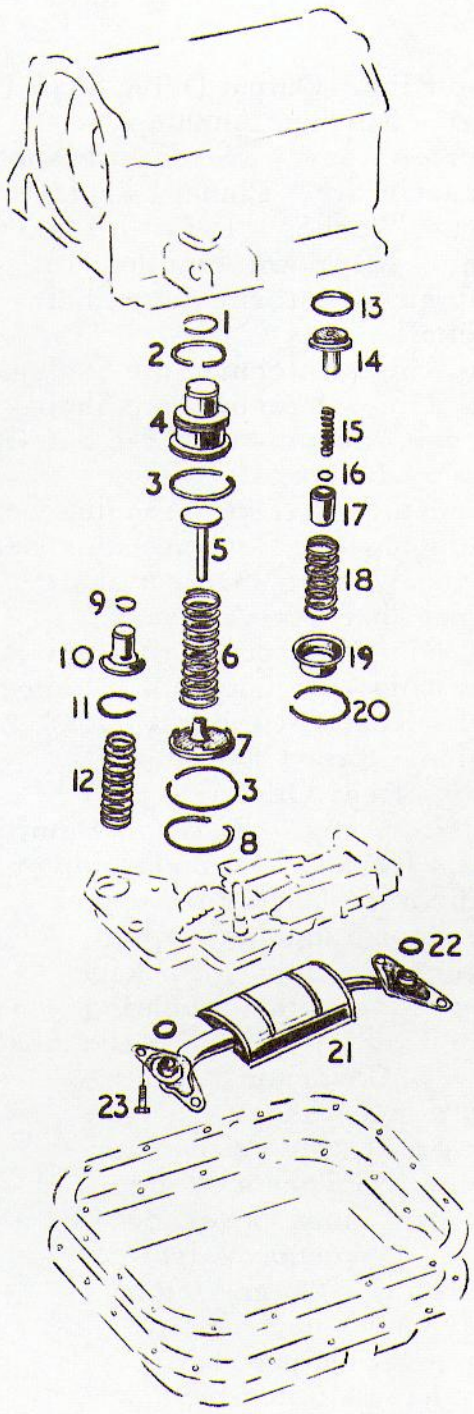
1
2
3
4
5
6
7
8
9
10
11
12
13
14
15
16
17
18
19
20
21
22
23

TRANSMISSION (6) KICKDOWN, ACCUMULATOR, REVERSE SERVO PISTONS & OIL STRAINER.

Part No.	Item	Description	No. off per car
1314249	1	Seal Ring - Small - K/Down Servo Piston	1
1322363	2	Seal Ring - Med. - K/Down Servo Piston	1
1736224	3	Seal Ring - Large - K/Down Servo Piston	1
1736218	4	Piston - K/Down servo	1
1736221	5	Rod Assy. - K/Down Piston	1
1736222	6	Spring - K/Down Piston	1
1736219	7	Guide - K/Down Piston Rod	1
1736223	8	Snap Ring - K/Down Piston Guide	1
1672287	9	Seal Ring - Accumulator Piston - Small	1
1736226	10	Accumulator Piston	1
1736233	11	Seal Ring - Accumulator Piston - Large	1
1854219	12	Spring - Accumulator Piston	1
1329638	13	Seal - Reverse Servo Piston	1
1732099	14	Piston - Reverse Servo	1
1732102	15	Spring - Reverse Servo Cushion	1
1732101	16	Ring - Reverse Servo Piston Plug	1
1736214	17	Plug - Reverse Servo Piston	1
1824316	18	Spring - Reverse Servo Piston	1
1824317	19	Retainer - Reverse Servo Piston Spring	1
1329642	20	Snap Ring - Spring Retainer	1
1736216	21	Oil Pump Strainer	1
1401256	22	Seal - Oil Strainer Tube	2
180081	23	Bolt - Oil Strainer Support	4

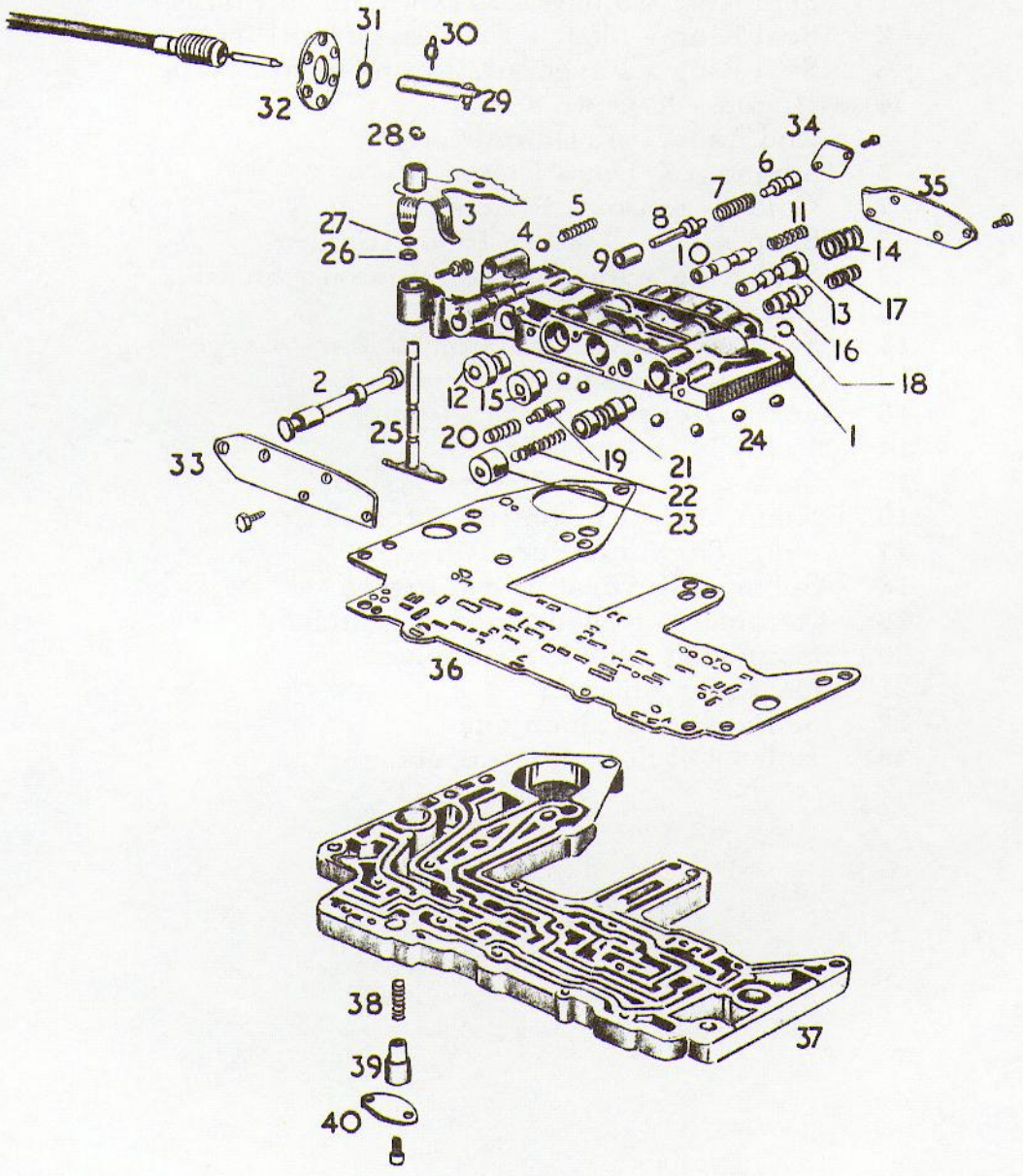
31
30
32
29
28
34
6
7
35
27
3
5
8
11
26
4
9
10
14
13
17
16
18
2
12
15
25
20
24
1
33
19
21
22
23
36
38
37
39
40

TRANSMISSION (7) VALVE BODY. VALVES & TRANSFER PLATE.

Part No.	Item	Description	No. off per car
1854271	1	Trans. Valve Body	1
1941625	2	Valve - Trans. Manual	1
1941688	3	Manual Valve Lever Assy.	1
147488	4	Ball - Manual Lever Detent	1
1942225	5	Spring - Manual Lever Ball	1
1941622	6	Valve - Trans. Throttle	1
1949847	7	Spring - Throttle Valve	1
1941623	8	Valve - Trans. Kickdown	1
1941624	9	Plug - K/Down Detent	1
1941602	10	Valve - 1-2 Shift	1
1942229	11	Spring - 1-2 Shift Valve	1
1941603	12	Plug - 1-2 Shift Valve Governor	1
1941600	13	Valve - 2-3 Shift	1
1942231	14	Spring - 2-3 Shift	1
1941601	15	Plug - 2-3 Shift Valve Governor	1
1941604	16	Valve - Throttle Compensator	1
1949516	17	Spring - Throttle Comp. Valve	1
1539430	18	Snap Ring - Shuttle Valve	1
1854276	19	Valve - 1-2 Relay	1
1854277	20	Spring - 1-2 Relay Valve	1
1854275	21	Valve - Shuttle	1
1854278	22	Spring - Shuttle Valve	1
1854274	23	Plug - Shuttle Valve	1
	24	Ball - Check Valve	6
1941626	25	Lever Assy. - Throttle Valve Operating	1
1732183	26	Seal - Throttle Lever Shaft	1
1949565	27	Washer - Throttle Lever Shaft Seal	1
1539430	28	Snap Ring	1
1941636	29	Adaptor & Pin - Control Cable	1
1673184	30	Spring - Control Cable Adaptor	1
1316813	31	Grommet - Gearshift Control Cable	1
1856492	32	Flange - Control Cable Adjusting	1
1854245	33	Cover - Governor Plug	1
1854258	34	Cover - Throttle Valve	1
1854273	35	Cover - Shift Valve	1
1941606	36	Plate - Valve Body	1
1941605	37	Transfer Plate Assy.	1
2204493	38	Spring - Reverse Blocker Valve	1
1854217	39	Valve - Reverse Blocker	1
1854272	40	Cover - Reverse Blocker Valve	1