Heater and Demist

Heater and Demist

List of Contents

HEATING & VENTILATING SYSTEM (CHASSIS 2001 TO 2019).

Part No.	Item	Description	No. off per car	Part No.	Item	Description	No. off per car
404-1-73000-2	1	Pipe - Radiator Hose to Heater	1	-	17	Compoflex Hose 1¼" i/d x 19" long	2
-	2	Rubber Hose ½" i/d x 7/8" o/d x 2½" long	1	Smiths			
N.707102-14	3	Hose Clip	6	CHS.299/1	18	Demist Elbows	2
404-1-73009	4	Connector	1	404-1-73012	19	Hose Clip - Jubilee No. 1X	2
N.631911	5	Nut	1	Smiths			
N.631901	6	Special Washer	1	CHS.2280	20	Outlet Deflector	1
404-1-73000-1	7	Pipe Clip	1	Smiths			
N.321190	8	Fibre Washer	1	CHS.2100	21	Base Seal	1
404-1-73003-3	9	Banjo Connection and Pipe	1	Smiths			
N.321300	10	Fibre Washer	1	CHS.1065/68	22	Control Unit with Switch	1
N.321180	11	Cylinder Head Banjo Bolt	1			Smiths CHS 2067/60 Control Cable (1)	
-	12	Rubber Hose - Convuluted ½" i/d 11" long	1			Smiths CHS 2067/72 Control Cable (1)	
-	13	Rubber Hose - Convuluted ½" i/d 8" long	1	-	23	Compoflex Hose 3¼" i/d x 8" long	1
Smiths				N.707067	24	Hose Clip - Jubilee No.5.	2
CHS.2000/5	14	Heater	1	Smiths			
404-1-61081	15	Demist Duct LH	1	CHS.4015/11	25	Blower	1
404-1-61082	-	Demist Duct RH	1	-	26	Compoflex Hose 4" i/d x 14" long	1
404-1-73013	16	Hose Clip - Jubilee No.1A	2			(To Scuttle Ventilator)	

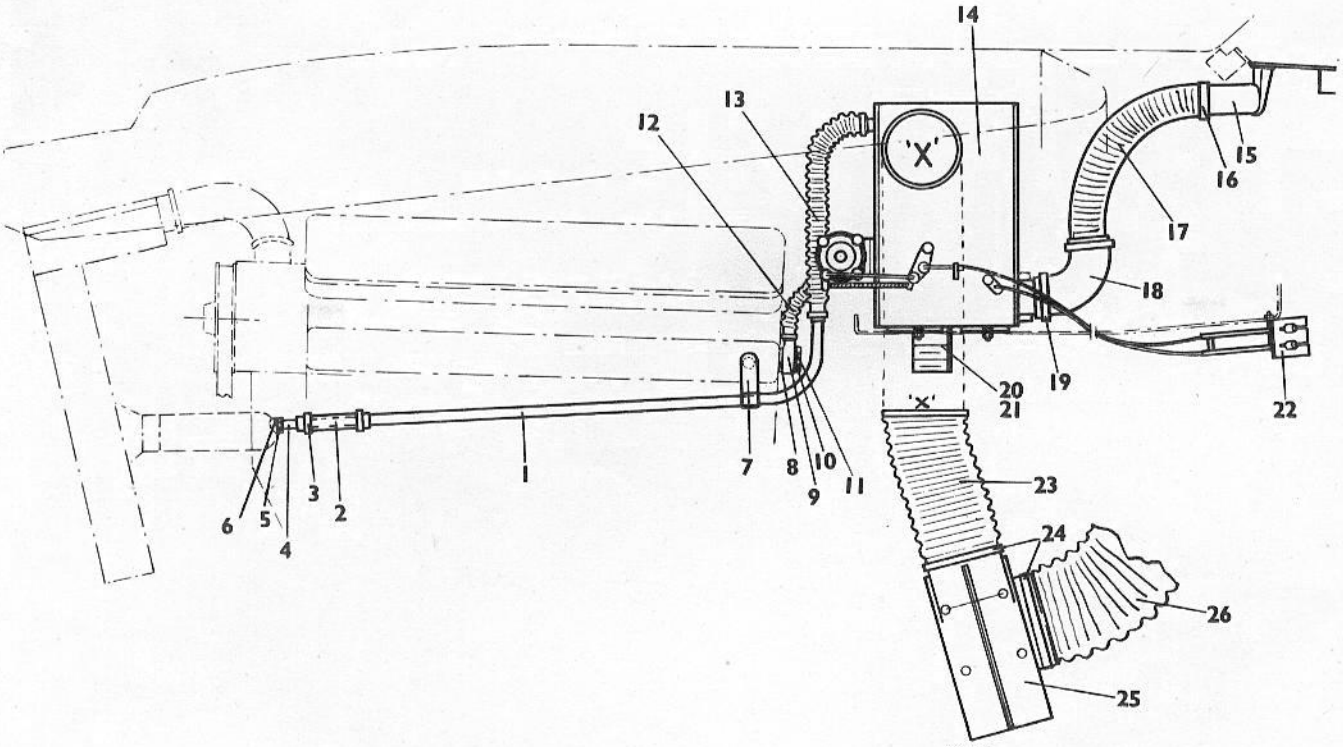

PLAN
VIEW OF BLOWER

HEATING AND VENTILATION SYSTEM. (CHASSIS 2020 ONWARDS)

Part No.	Item	Description	No. off per car	Part No.	Item	Description	No. off per car
404-1-73000-2	1	Pipe - Radiator to Heater	1	404-II-73014	19	Blower Inlet Cowl	1
-	2	Rubber Hose ½" i/d x 7/8" o/d x 2½" long	1	404-II-73000-	20	Blower Mounting Angle	1
N.707102-14	3	Hose Clip	6	Smiths			
404-1-73009	4	Connector) Not used with	1	CHS2099/1	21	Demist Elbow	2
N.631911	5	Nut) new type	1	404-1-73012	22	Hose Clip - Jubilee No. 1X	2
N.631901	6	Special Washer) Radiator Hose	1	-	23	Compoflex Hose 1¼" i/d 19" long	2
404-1-73000-1	7	Pipe Clip	1	404-1-73013	24	Hose Clip - Jubilee No.1A	2
N.321190	8	Fibre Washer	1	404-II-63072-			
404-1-73000-3	9	Banjo Connection & Pipe	1	31	25	Demist Duct LH	1
N.321300	10	Fibre Washer	1	404-II-63072-			
N.321180	11	Banjo Bolt	1	32	-	Demist Duct RH	1
-	12	Rubber Hose - Convuluted ½" i/d x 11" long	1	Smiths	26	Control Unit with Switch & Control Cables	1
-	13	Rubber Hose - Convuluted ½" i/d x 8" long	1	CHF/1065/105			
Smiths				Smiths			
CHS2000/12	14	Heater	1	CHS2280	27	Outlet Deflector	1
-	15	Compoflex Hose 3¼" i/d x 84" long	1				
404-II-73000-2	16	Saddle Clip	1	Smiths			
N.707067	17	Hose Clip - Jubilee No.5	3	CHS2100	28	Base Seal	1
Smiths							
CHS4015/11	18	Blower	1				

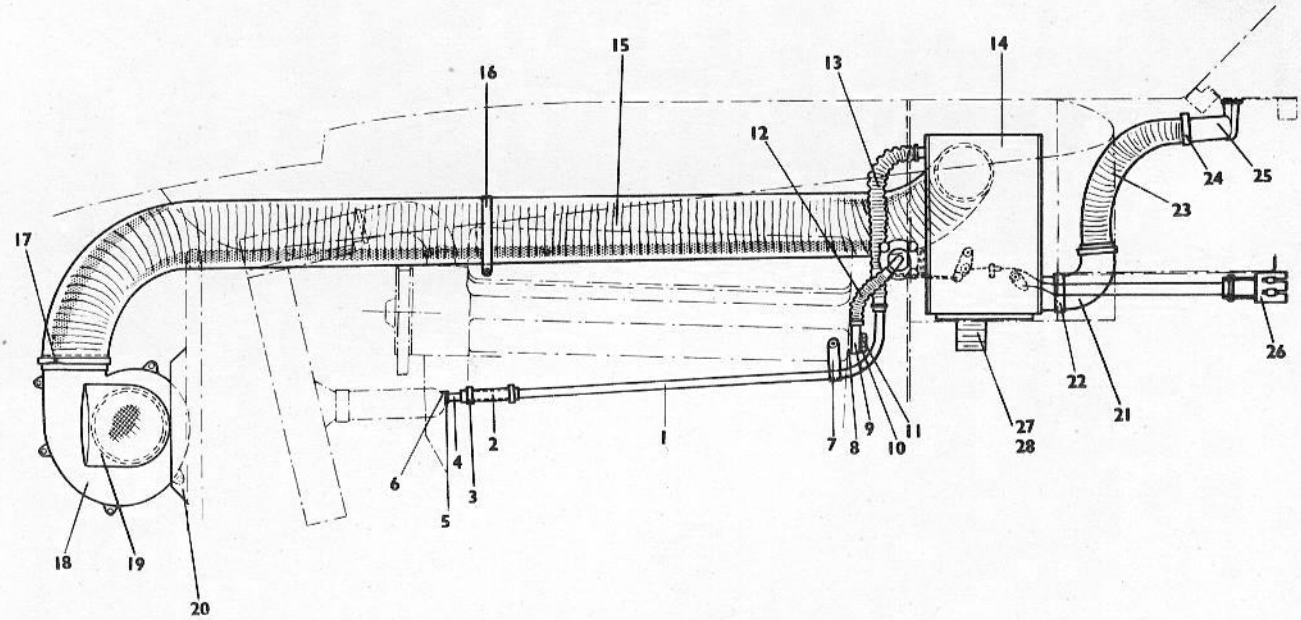

Heater and Demist

General Description

The Heating, Ventilating and Demist System comprises basically of three components, Blower Unit, Heater Box and Quadrant Control. On the Type 404 Chassis No.2001 to 2019 a controllable scuttle ventilator is fitted for use in conjunction with the system. The scuttle ventilator is operated by the push/pull knob marked 'V' on the left hand side of the instrument panel.

Blower Unit

The blower unit on the Type 404 Chassis No.2001 to 2019 is fitted in the left hand side of the scuttle tray see Fig.248. On Type 404 Chassis No.2020 onwards and all Type 405 cars the unit is mounted in front of the radiator on the right hand side see Fig.249. The blower unit is operated by pulling out the lower lever on the quadrant control.

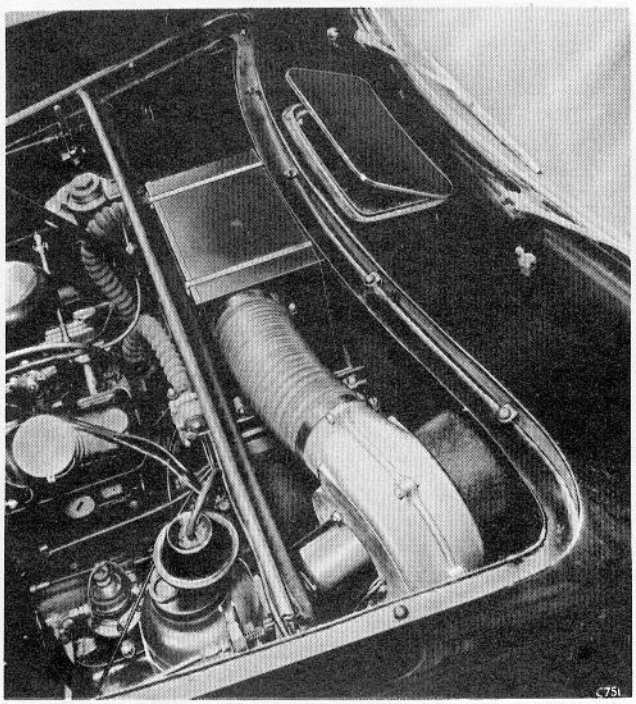

Fig. 248. Heater box and blower unit (Type 404 car chassis No. 2001-2019)

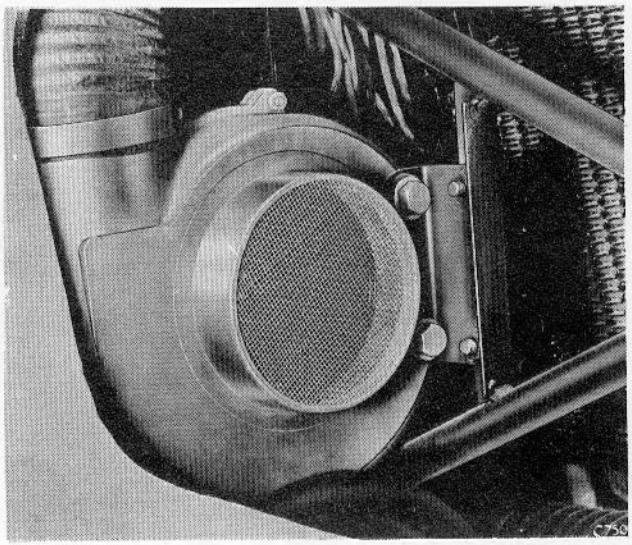

Fig. 249. Blower unit (Type 404 chassis No. 2020 onwards and Type 405 cars)

Removing and Refitting. Type 404 Chassis No. 2001 to 2019

To remove the blower unit disconnect the battery and the electrical feed wire to the blower unit. Release the hose clips from either end of the blower. Working from inside the parcel shelf, release the two mounting bracket securing nuts and remove the four bolts. Slide the unit forward and lift out.

For refitting the procedure is reversed.

Removing and Refitting. Type 404 Chassis No. 2020 Onwards and All Type 405

To remove the blower unit disconnect the battery and the electrical feed wire to the blower. Remove the bonnet and spot lamp. Release the twelve screws and washers to remove the air intake aperture grille. Release the hose clip securing the air pipe to the blower unit. Support the blower and remove the four bolts attaching the mounting bracket to the mounting channel. Remove the blower unit through the air intake aperture.

For refitting the procedure is reversed.

Heater Box

The heater box is installed in the scuttle tray see Fig.248 on Type 404 Cars Chassis 2001 to 2019. On

Type 404 Cars Chassis 2020 onwards and all Type 405 Cars see Fig.250. The heater box incorporates the heater radiator and control flaps. The flaps are operated by the quadrant control. The heater radiator is supplied with hot water from the engine cooling system via a water control valve. The hot air from the box provides the heating system to the interior of the car and the demisting and defrosting system to the windscreen.

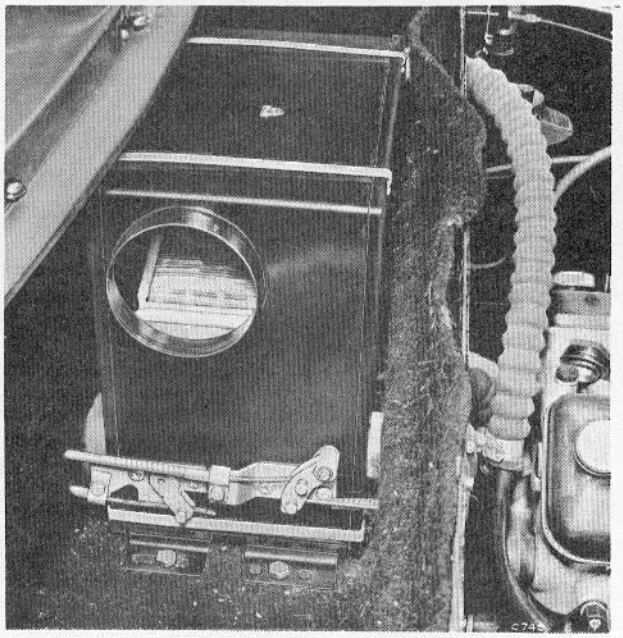

Fig. 250. Heater box (Type 404 chassis No. 2020 onwards and Type 405 cars)

Removing and Refitting

To remove the heater box drain the engine cooling system. Release the hose clips attaching the heater box to the air pipe and the water return pipe to the engine radiator. Release the hose clip attaching the water valve to the water supply pipe. Remove the water valve from the heater box by removing the two screws and releasing the control rod and return spring. Release the attachments of the inner and outer control cables from the heater box. Working from inside the car disconnect the flexible drive cable from the speedometer. Remove the side, bottom and rear trimming panels. Release the hose clips attaching the demist pipe to the demist elbow. Remove the four nuts and bolts securing the heater box to the scuttle tray. Lift out the heater box.

For refitting the procedure is reversed using a suitable adhesive to refix the parcel shelf trimming panels. Re-adjust the controls.

Adjustment of Controls.
Heating/Ventilating Control See Fig.250.

1. Move the ventilating lever on the quadrant control to the "off" position. The air valve lever on the heater box should now be at its extreme anticlockwise position and negligible air should enter the car with the blower running (ie only reasonable valve leakage).

2. Move the ventilating control lever to the "hot" position. The air valve lever on the heater box should now be at its extreme clockwise position with the water valve lever about to commence closing.

3. If the correct operation at (1) or (2) is not obtained the length of the inner cable should be adjusted as follows. Slacken the clamping screw of the inner cable at the heater box. Slide the cable through the trunnion. Retighten the screw and recheck as in (1) and (2).

4. Move the ventilating control to the "cold" position. The lever on the water valve should now be in the vertical position, with the water flow to the heater cut off. With the engine and blower running, cold air should enter the car within 2-3 minutes. If this is not so it indicates that water is still flowing through the heater radiator core. This can be checked by removing the return water hose from the heater box and observing whether water is issuing from the heater core when the engine is running at normal speeds. Close the open end of the pipe manually to prevent loss of water.

   If the water is issuing from the heater core slacken the clamp screw holding the water valve operating rod and move the water valve independently of the heater valve. A slight resistance to motion should be felt as the lever approaches and passes the vertical position indicating that the valve is seating correctly. If this resistance is not felt turn the centre adjusting screw on the water valve lever approximately 1/4 turn in a clockwise direction. With the ventilating control in the "cold" position and the water valve lever in the vertical position retighten the control rod clamping screw.

Demisting/Defrosting Control

1. Move the demisting lever on the quadrant control to the "off" position. The demist lever on the heater box should be at its extreme clockwise position. No air should pass through to the windscreen with the blower running.

2. Move the demist control lever to the "defrost" position the demist lever on the heater box should now be at its extreme anticlockwise position.

3. If the correct operation at (1) and (2) is not obtained, the adjustment to the demisting/defrost control cable cable should be made in a similar manner as stated for the adjusting of the heating/ventilating control.

Removing and Refitting Demister Pipes

To remove the demister pipes see Fig.251. Disconnect the flexible drive cable from the speedometer and remove the side, bottom and rear parcel shelf trimming panels. Release the hose clips from the heater box elbows and demist ducts. Remove the demister pipes.

For refitting the procedure is reversed, using a suitable adhesive to refix the parcel shelf trimming panels.

Quadrant Control

The quadrant control is fitted centrally beneath the parcel shelf see Fig.252. If additional air flow is desired, open the rear quarter light to suit requirements. The control positions for various conditions are as follows.

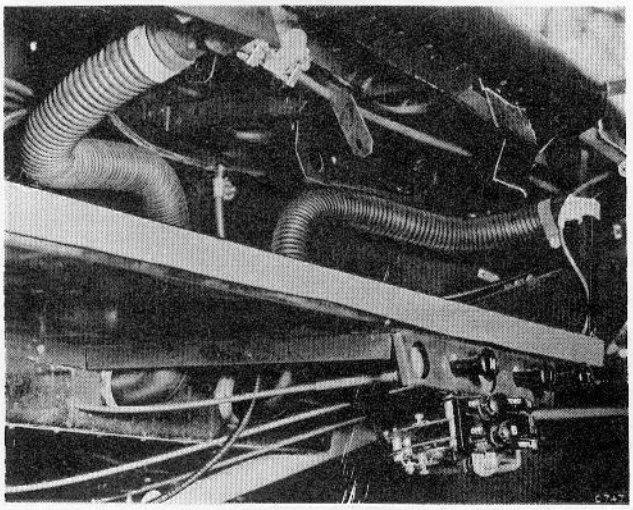

Fig. 251. Assembly of demister pipes

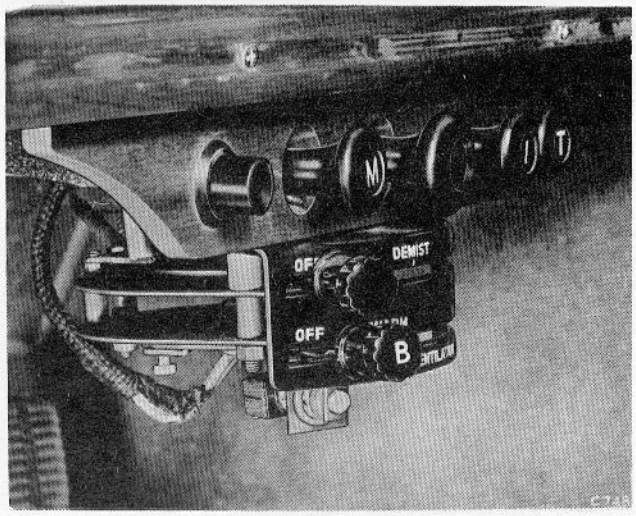

Fig. 252. Heating/ventilating quadrant control

Type 404 Car Chassis No. 2001-2019

1. For Recirculation.

   Scuttle flap closed and the blower unit switched "on" set the ventilating control to the temperature required.

2. Warm Weather.

   Open the scuttle flap and set the ventilating control to "cold". In addition the blower unit may be switched "on" and the screen control set to "demist" or "defrost" to suit requirements.

3. Cold Weather.

   With the scuttle flap partially opened and the blower switched "on" set the ventilating control to a position between "warm" and "hot" and the screen control to "demist"

4. Freezing Conditions.

   Scuttle flap closed, set the screen control to "defrost" and the ventilating control between "warm" and "hot" as desired. For extreme icing conditions move the ventilating control to "off".

Type 404 Car Chassis 2020 Onwards and Type 405 Cars

1. No heating and no ventilating.

   Set the ventilating and screen controls to the "off" positions.

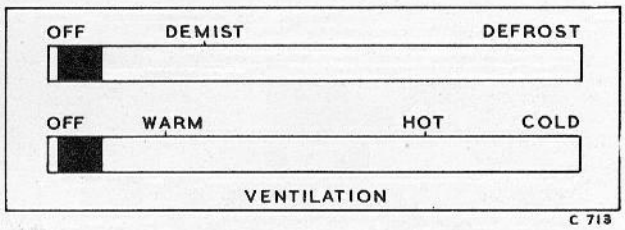

Fig. 253. Heater control positions

2. Warm Weather.

   When an equal supply of cool air is desired switch the ventilating control to "cold" and the screen control to "demist"

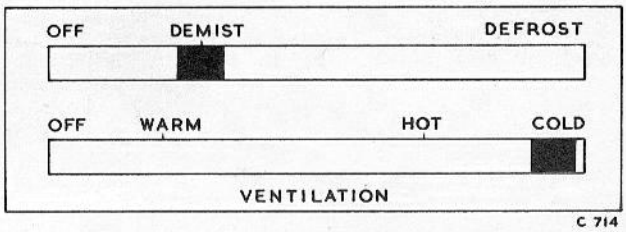

Fig. 254. Heater control positions

3. Warm Weather.

   When maximum air circulating at head level is desired switch the ventilating control to "cold" and the screen control to "defrost".

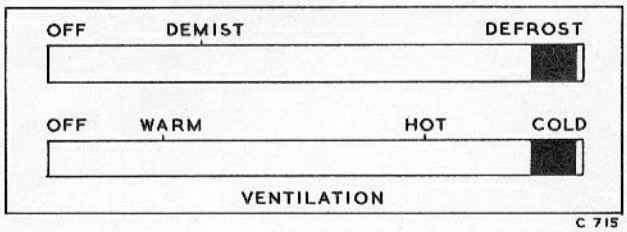

Fig. 255. Heater control positions

4. Cold Weather.

   Set the ventilating control to a position between "warm" and "hot" and the screen control to "demist".

5. Freezing Conditions.

   Set the ventilating control to a position between

"warm" and "hot" as desired and the screen control to "defrost". For extreme icing conditions move the ventilating control to "off".

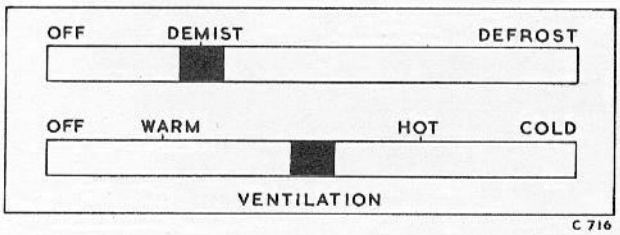

Fig. 256. Heater control positions

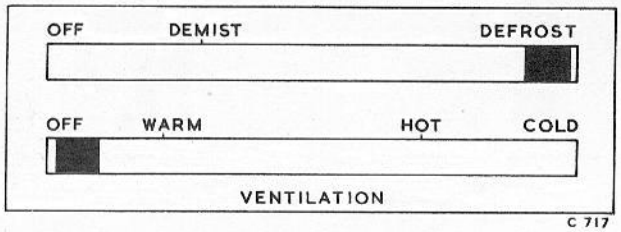

Fig. 257. Heater control positions

Removing and Refitting.

To remove the quadrant control first disconnect the battery. Working from the underside of the parcel shelf support the quadrant and remove the two securing nuts from the mounting bracket. Release the two clamps securing the two outer casings, release and remove the trunnion nipples attaching the two inner control cables. Release the centre clamp attaching the electrical supply cable. Unsolder the two electrical connections from the blower motor control switch and remove the quadrant control.

To fit a replacement unit. Solder the electrical connections to the switch, attach the centre clamp securing the electrical cable, refit the inner cables and outer casings, re-assemble the quadrant control to the mounting bracket. Connect the battery.

Check the controls and re-assemble if necessary.

Removing and Refitting Scuttle Ventilation Flap

To remove the scuttle ventilating flap see Fig.258. Open the flap fully remove the split pin and spring washer attaching the flap stay to the swivel bolt. Remove the four nuts and screws securing the flap hinges to the scuttle. Remove the ventilating flap.

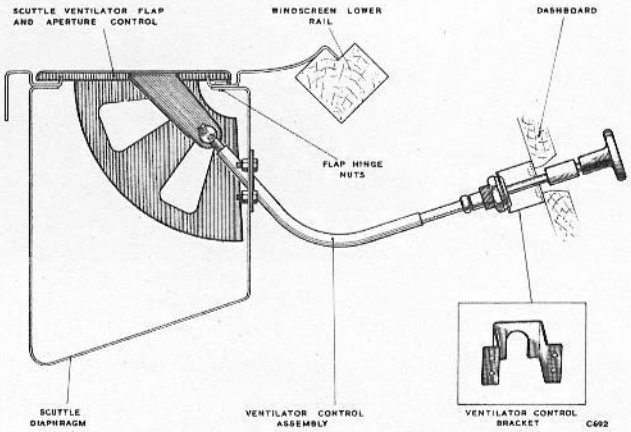

Fig. 258. Scuttle ventilator assembly

For refitting the procedure is reversed.

Removing and Refitting Scuttle Ventilation Control

To remove the scuttle ventilating flap control see Fig.258. Remove the flap as previously described, followed by the swivel bolt from the end of the control. Working from inside the car remove the spring loaded control knob marked "V" and the four nuts and bolts attaching the control mounting bracket to the scuttle diaphragm. Release the nut securing the control to the mounting bracket on the dashboard. Slide the control clear of the mounting bracket and withdraw from the underside of the dashboard.

For refitting the procedure is reversed.