Mechanical Voltage Control
411 up to Chassis 7611119

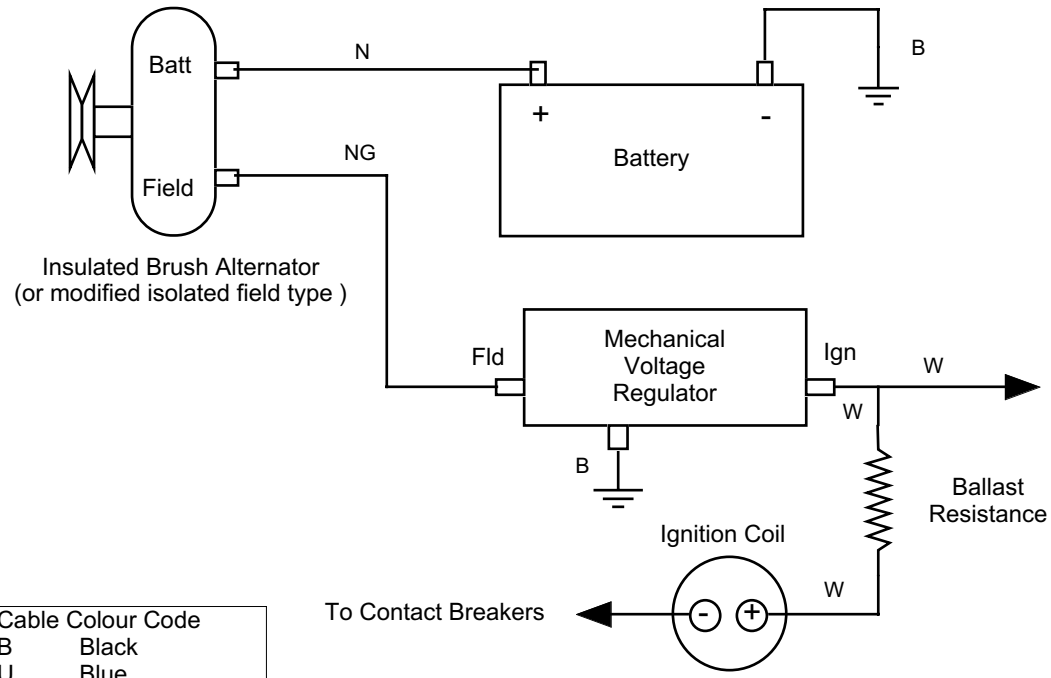

Electronic Voltage Control
411 from Chassis 7611119, All 412 & 603

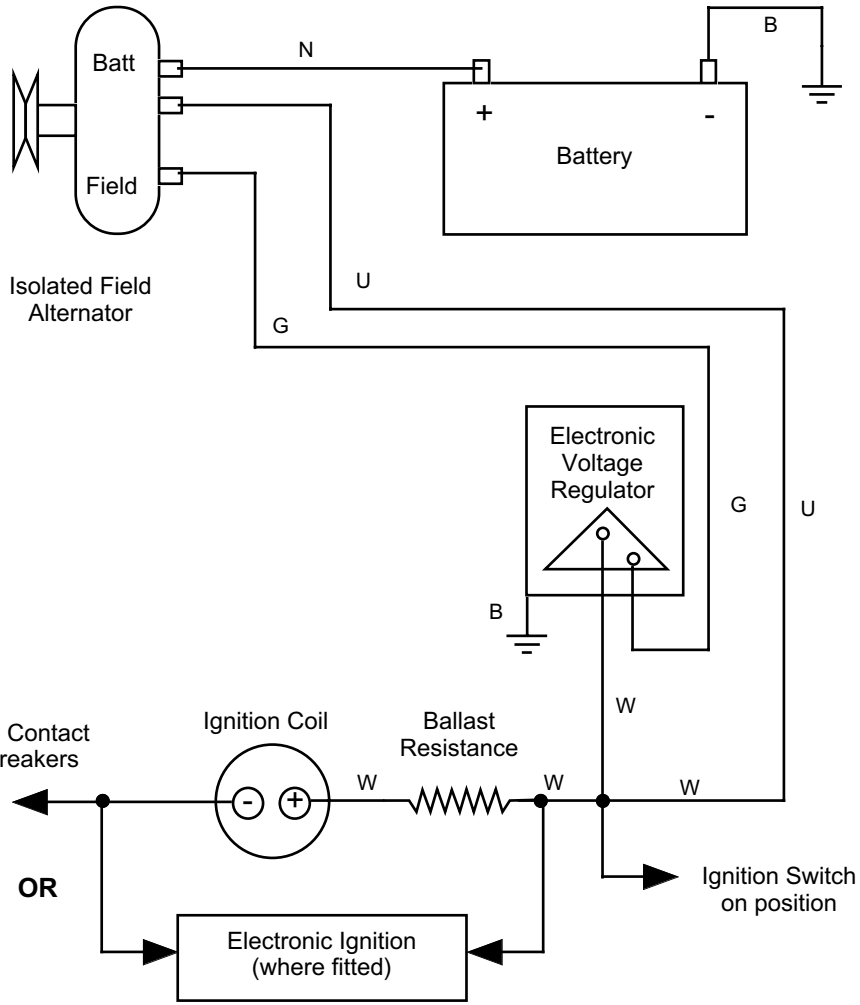

Cable Colour Code	
B	Black
U	Blue
N	Brown
G	Green
K	Pink
P	Purple
O	Orange
R	Red
S	Slate (Grey)
W	White
Y	Yellow
Modifiers	
D	Dark
L	Light
M	Medium

C.R.Foster
08/04/00

Wiring Diagram for BRISTOL 411, 412 & 603
Alternator Voltage Control Circuit Diagrams

Data from Bristol Cars
SKN 6164